DOMETIC

REFRIGERATION
RUC SERIES

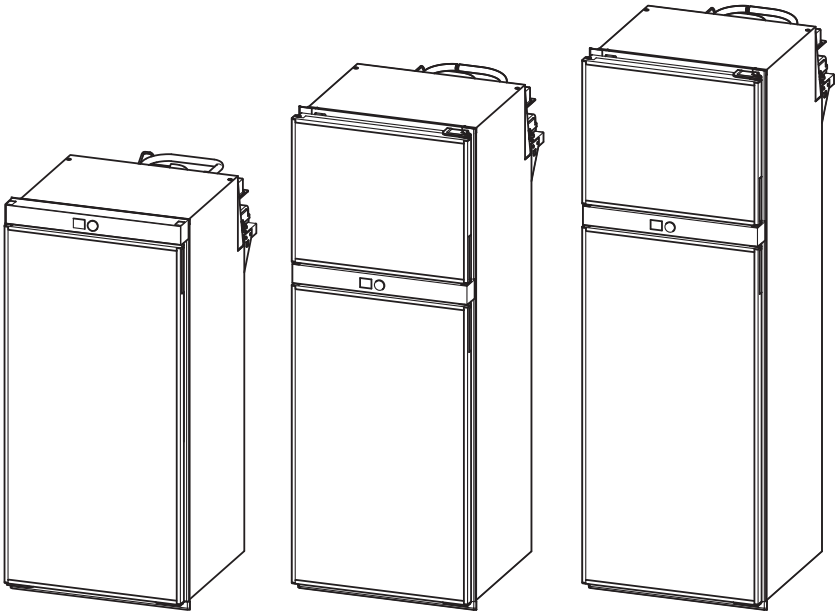

RUC 5208X, RUC 6408X, RUC 8408X

EN

Compressor refrigerator

Installation and Operating Manual

Please read this instruction manual carefully before installation and first use, and store it in a safe place. If you pass on the product to another person, hand over this instruction manual along with it.

Table of contents

1 Explanation of symbols 4
2 Safety instructions 4
3 Scope of delivery 7
4 Accessories 7
5 Intended use 7
6 Technical description 8
7 Installing the refrigerator 12
8 Connecting the refrigerator 23
9 Using the refrigerator 25
10 Cleaning and maintenance 52
11 Troubleshooting 52
12 Warranty 57
13 Disposal 58
14 Technical data 58

1 Explanation of symbols

DANGER!
Safety instruction: Failure to observe this instruction will cause death or serious injury.

WARNING!
Safety instruction: Failure to observe this instruction can cause death or serious injury.

CAUTION!
Safety instruction: Failure to observe this instruction can lead to injury.

NOTICE!
Failure to observe this instruction can cause material damage and impair the function of the product.

NOTE
Supplementary information for operating the product.

2 Safety instructions

The manufacturer accepts no liability for damage in the following cases:

- Faulty assembly or connection
- Damage to the product resulting from mechanical influences and incorrect connection voltage
- Alterations to the product without express permission from the manufacturer
- Use for purposes other than those described in the operating manual

2.1 General safety

DANGER!

- On boats: If the device is powered by the mains, ensure that the power supply has a residual current circuit breaker.

WARNING!

- Have a qualified technician perform the installation in wet rooms.
- Do not operate the device if it is visibly damaged.
- If this device's power cable is damaged, it must be replaced by the manufacturer, customer service or a similarly qualified person in order to prevent safety hazards.
- This device may only be repaired by qualified personnel. Inadequate repairs may cause serious hazards.
- This device can be used by children aged 8 years or over, as well as by persons with diminished physical, sensory or mental capacities or a lack of experience and knowledge, providing they are supervised, or have been taught how to use the device safely and are aware of the resulting risks.
- Cleaning and user maintenance must not be carried out by children without supervision.
- Children must be supervised to ensure that they do not play with the device.
- Always keep and use the device out of the reach of children under 8 years of age.
- Do not store any explosive substances, such as spray cans with propellants, in the device.

CAUTION!

- Danger of crushing! Do not put your fingers into the hinge.
- Foodstuff may only be stored in its original packaging or in suitable containers.

NOTICE!

- Check that the voltage specification on the type plate is the same as that of the power supply.
- Never pull the plug out of the socket by the connection cable.
- The refrigerator is not suitable for storing substances which are caustic or contain solvents.
- Keep the drainage outlet clean at all times.
- Do not open the refrigerant circuit under any circumstances.
- Never transport the device in a horizontal position, so that lubricating oil does not drain from the compressor into the pipes.

- Make sure that the refrigerator circuit is not damaged during transportation. The refrigerant in the refrigerator circuit has a low potential to become flammable.
  In the event of any damage to the refrigerator circuit:
  – Avoid naked flames and sparks.
  – Air the room well.
- Set up the device in a dry location where it is protected against splashing water.

2.2 Operating the device safely

DANGER!

- Do not touch exposed cables with your bare hands. This applies especially when operating the device from the AC mains.

CAUTION!

- Before starting the device, ensure that the power supply line and the plug are dry.
- If you connect the device to a battery, make sure that no food comes into contact with the battery acid.

NOTICE!

- Do not use electrical devices inside the cooling device unless they are recommended by the manufacturer for that purpose.
- Do not place it near naked flames or other heat sources (heaters, direct sunlight, gas ovens etc.)
- **Danger of overheating!**
  Always ensure sufficient ventilation so that the heat generated during operation can dissipate. Make sure that the device is sufficiently far away from walls and other objects so that the air can circulate.
- Ensure that the ventilation vents are not covered.
- Do not fill the device with ice or fluid.
- Never immerse the appliance in water.
- Protect the appliance and the cable against heat and moisture.
- Make sure that foodstuffs do not touch the walls of the cooling area.

3 Scope of delivery

Quantity	Description
1	Refrigerator
1	Drain hose
1	Bottom trim piece
1	Sealing strip (fitted underneath during installation)
1	Installation and Operating Manual

4 Accessories

Available as accessories (not included in the scope of delivery):

Description
LS 300 ventilation grille (W x H: 490 x 249 mm, open ventilation area 667 cm^2)
RUC 5208X only: Door reversing kit

Accessories are available from specialist dealers. If you have any questions, please contact the dealer or your service partner directly.

5 Intended use

The refrigerator is suitable for refrigerating foodstuffs and storing frozen foodstuffs. The device is suitable for installation into caravans, motorhomes or boats. The device is designed to be operated from a 12 V DC or 24 V DC on-board supply as well as from a 100 – 240 V AC mains.

CAUTION! Health hazard!
Please check if the cooling capacity of the refrigerator is suitable for storing the food you wish to cool.

The refrigerator is only suitable for installation in a fitted cavity. Once it is installed, only the front of the appliance may be accessible.

6 Technical description

6.1 Description

The device can refrigerate goods to +8 °C to 0 °C and keep them cool. Products can be frozen to –10 °C to –20 °C in the freezer compartment. You can use the control display to set the desired temperature.

The refrigerator is suitable for use with 12 V or 24 V DC voltage and can therefore be used e.g. for mobile homes, caravans or on boats. It can also be connected to a 100 – 240 V mains supply.

The refrigerator can withstand a short term inclination of 30°, for example on boats.

All materials used in the refrigerator are compatible for use with foodstuffs. The refrigerant circuit is hermetically sealed and CFC-free.

6.2 Components

RUC 5208X

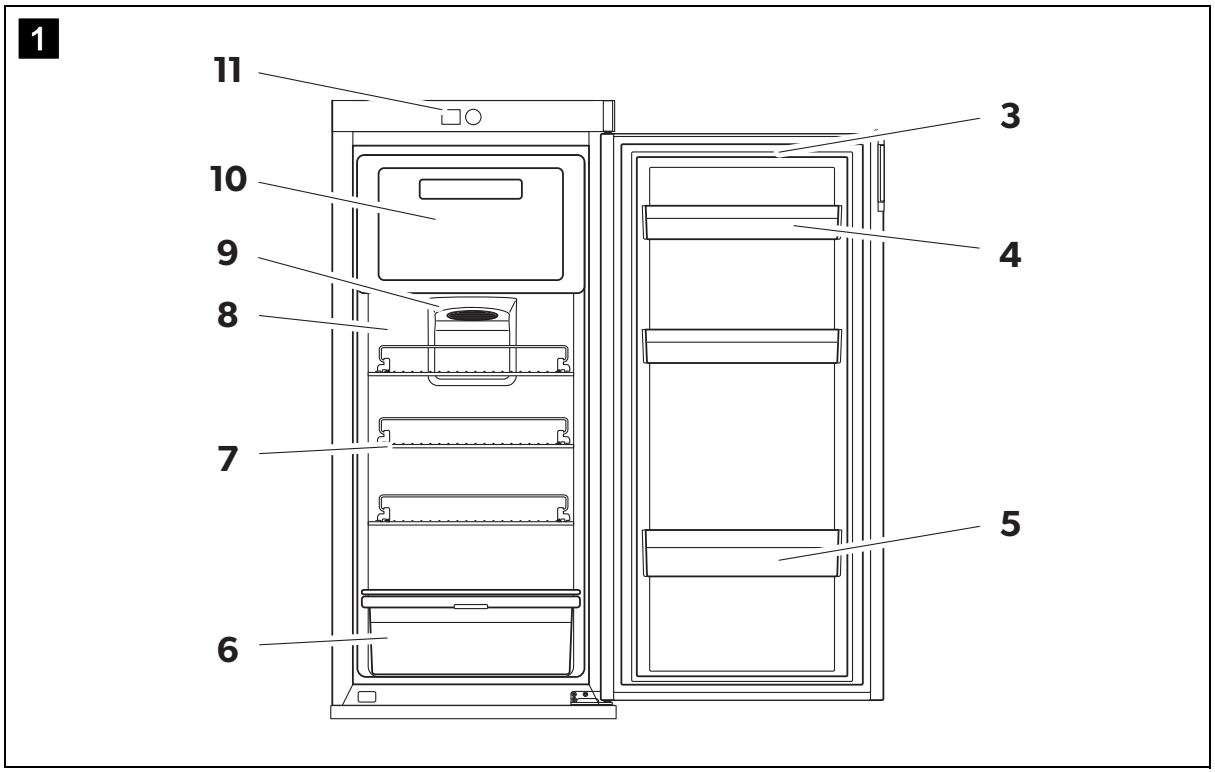

No. in fig. 1	Description	Quantity RUC 5208X
3	Refrigerator door	
4	Top door bin	2
5	Bottom door bin with bottle holder	
6	Fruit and vegetable section	
7	Refrigerator shelf	3
8	Refrigerator compartment	
9	Internal light	
10	Freezer compartment	
11	Control and display elements	

RUC 6408X, RUC 8408X

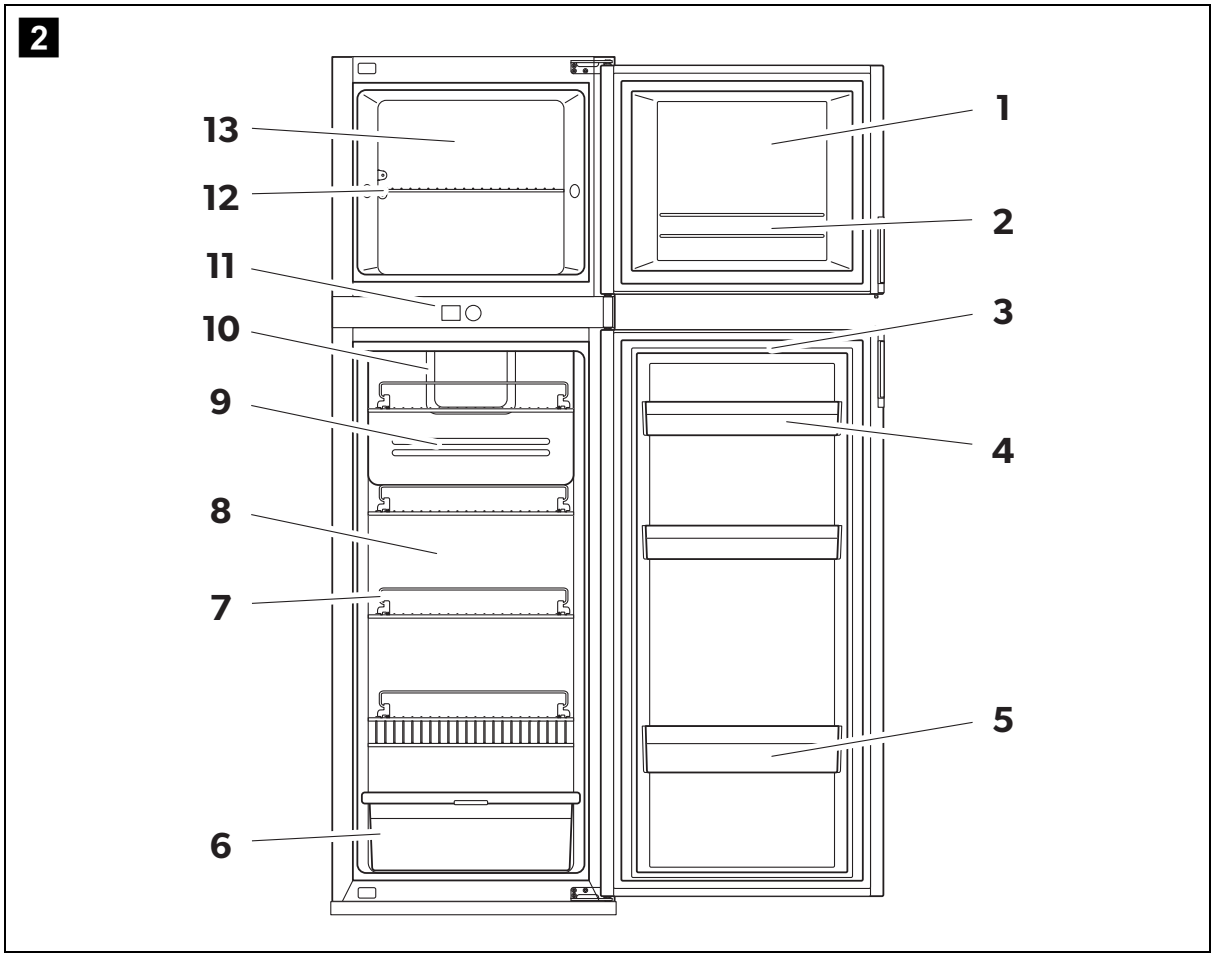

No. in fig. 2	Description	Quantity	
		RUC 6408X	RUC 8408X
1	Freezer compartment door		
2	Freezer door rack	1	1
3	Refrigerator door		
4	Top door bin	2	2
5	Bottom door bin with bottle holder		
6	Fruit and vegetable section		
7	Refrigerator shelf	3	4
8	Refrigerator compartment		
9	Air duct cover plate		
10	Internal light		

No. in fig. 2	Description	Quantity	
		RUC 6408X	RUC 8408X
11	Control and display elements		
12	Freezer shelf	1	1
13	Freezer compartment		

6.3 Control and display

3

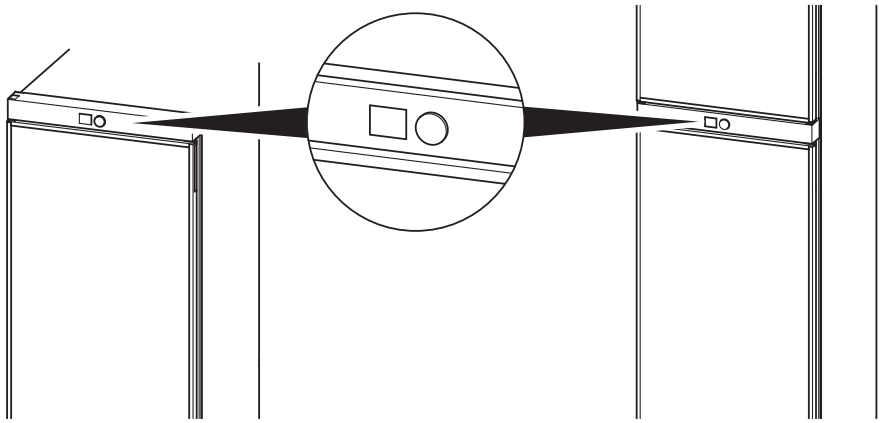

The refrigerator has a display and a control knob above the refrigerator door (fig. 3).

Function of the control knob (fig. 3):

- Rotate: Choose menu item. The selected menu item is highlighted.
- Short press: Confirm
- Press for 2 to 4 seconds: Acknowledge fault (chapter “Troubleshooting” on page 52)

7 Installing the refrigerator

7.1 Preparing the installation

When installing the refrigerator, note the following:

- Ensure that the floor is solid and level.
- Ensure that the refrigerator is level.
- The refrigerator must be installed so that it is easily accessible for service work, easy to de-install and install and can be easily removed from the vehicle.

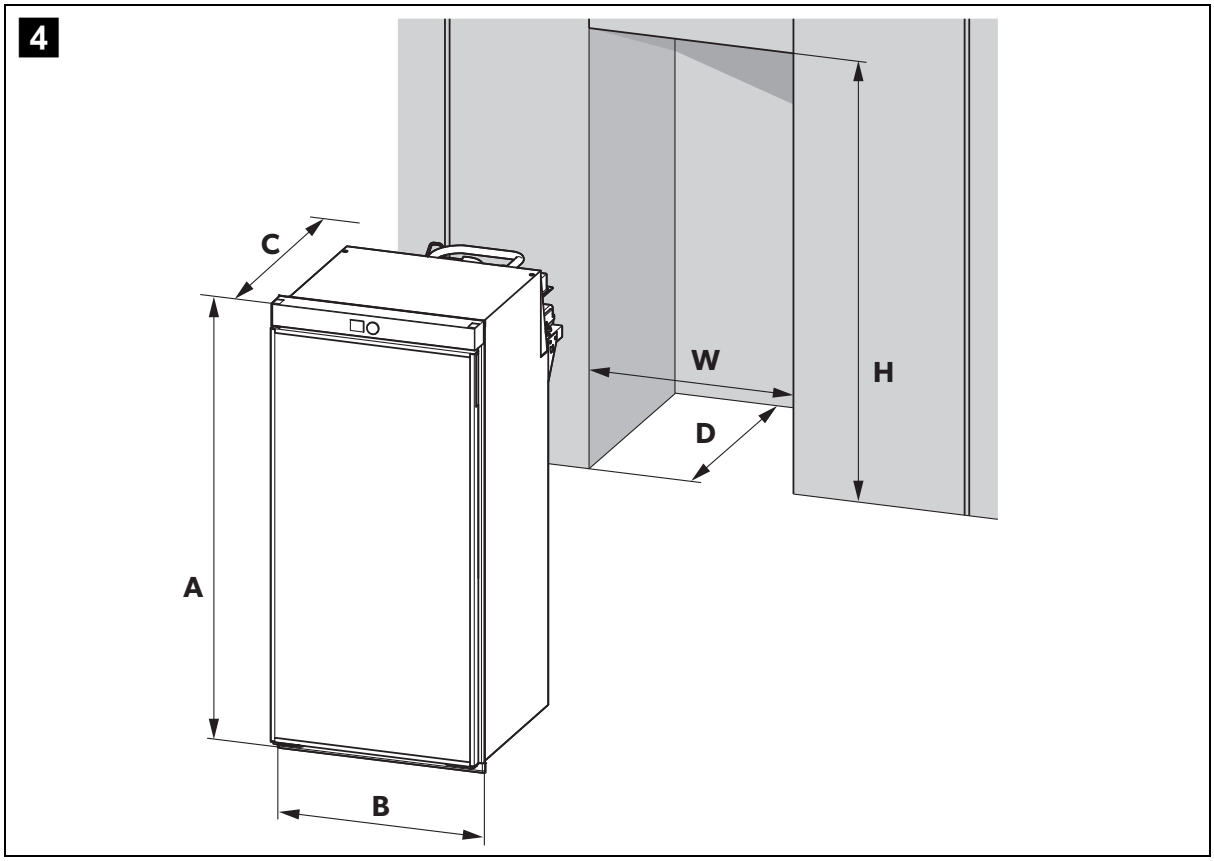

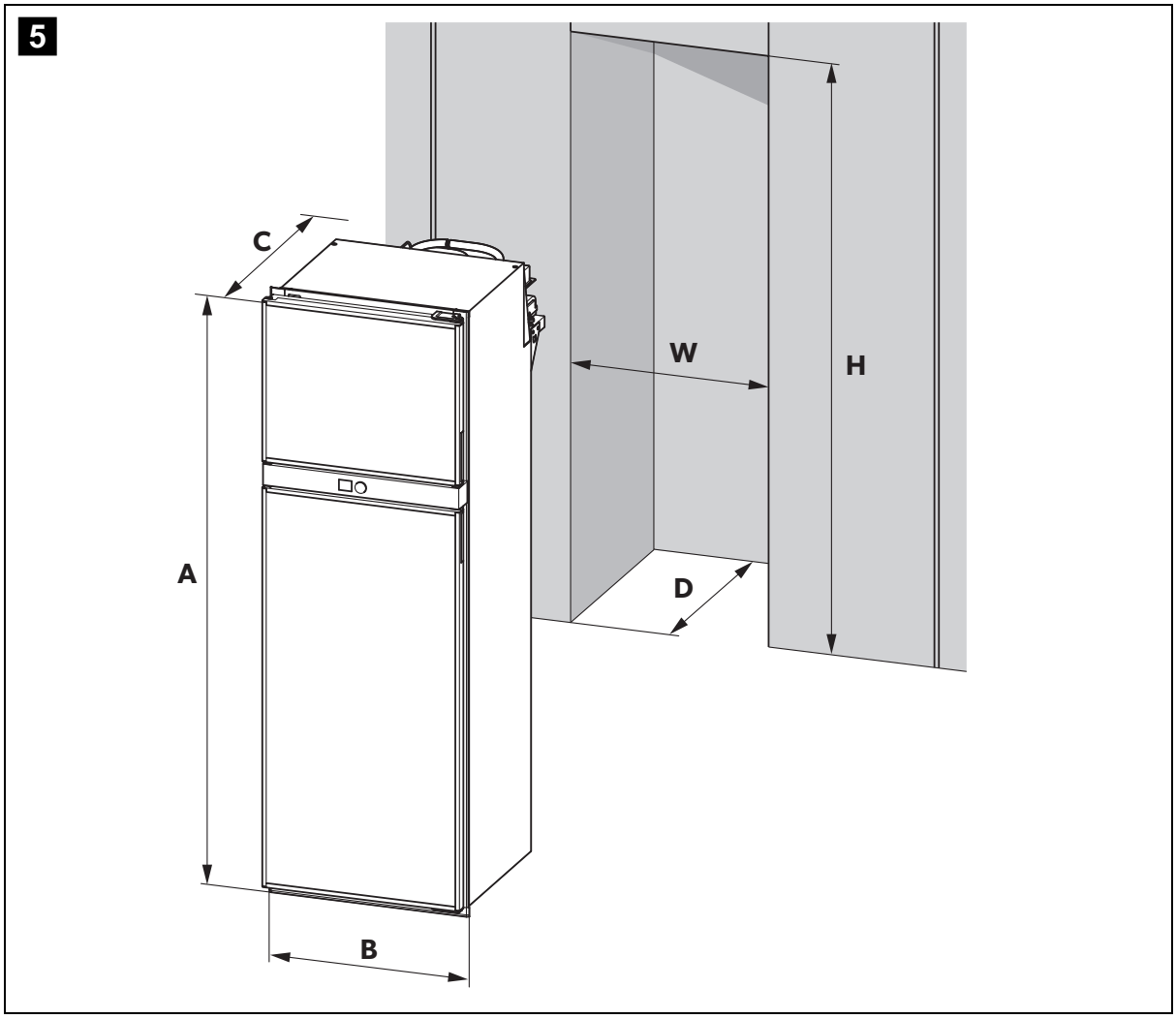

- The refrigerator must be installed in a recess so that it stands secure when the vehicle is in motion. Note the following dimensions (fig. **4** and fig. **5**):

	RUC 5208X	RUC 6408X	RUC 8408X
Refrigerator	**Overall dimension in mm**		
Height (**A**)	1191	1447	1657
Width (**B**)	550	550	550
Depth (**C**) (excludes control knob 5mm)	677	677	677
Recess	**Dimension in mm**		
Height (**H**)	1181 – 1186	1437 – 1442	1647 –1652
Width (**W**)	530 – 535	530 – 535	530 – 535
Depth (**D**)	min. 611	min. 611	min. 611

Installation with two rear vents

- The air inlet and outlet vents must not be covered by vehicle parts (such as an open door or by installing accessories such as bicycle racks) while operating.
- Install the refrigerator so that it is protected from excessive heat, as this leads to poor performance and increases the power consumption of the refrigerator.
- The electrical installation must comply with national and local regulations.

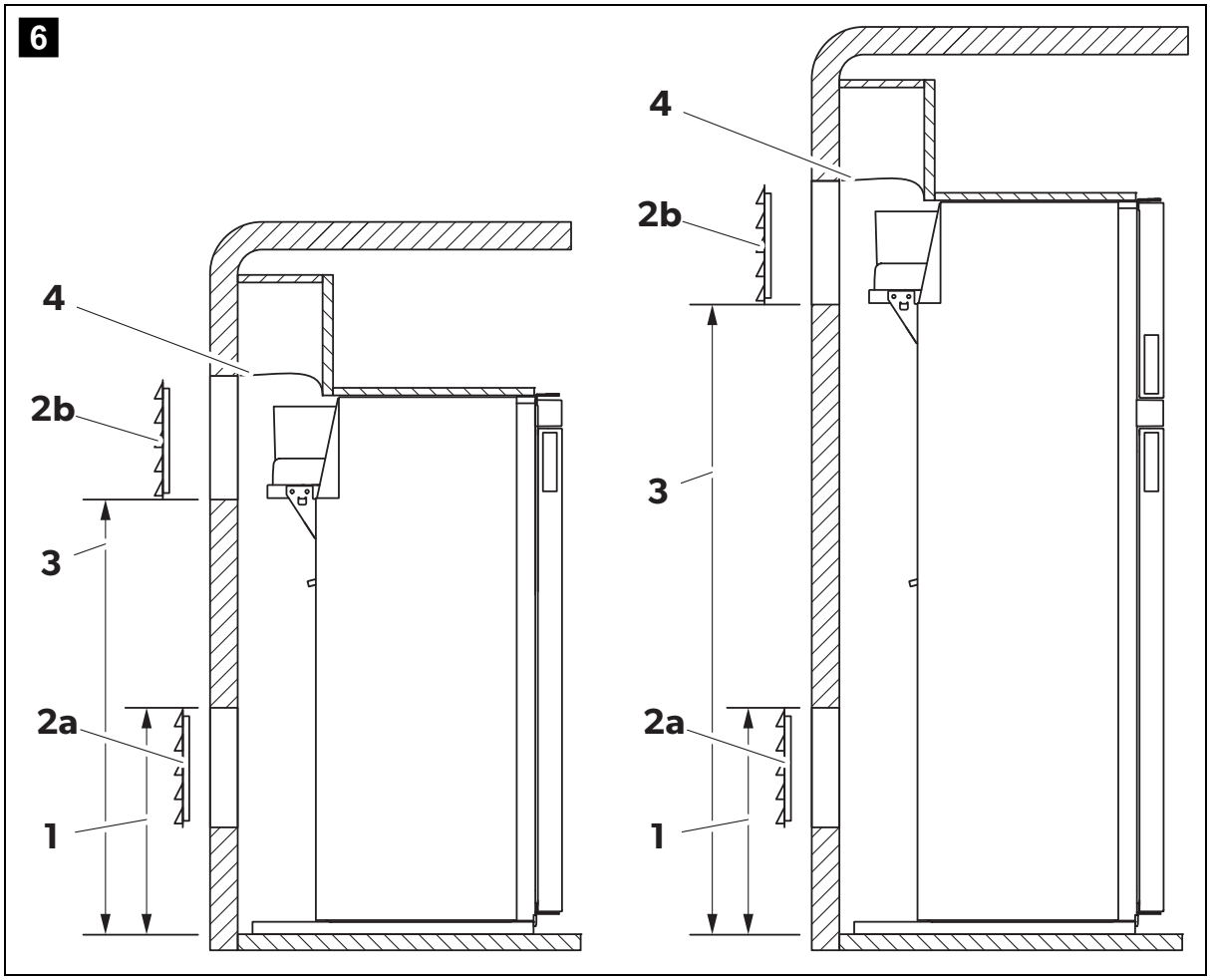

Pos. in fig. 6, page 14	Description
1	Maximum height to 250 mm below the compressor shelf
2	LS 300 ventilation grille
3	Minimum height is equal to the height of the compressor shelf
4	Air deflection plate

- The outer wall must be fitted with one air inlet ventilation grille (fig. 6 2a, page 14) and one outlet ventilation grille (fig. 6 2b, page 14) so that the heat generated can be easily released to the outside:
  - Lower air inlet vent LS 300 can be installed from flush to the vehicle floor up to a maximum height (top of vent) of 250 mm below the compressor shelf.
  - Upper air outlet vent LS 300 must be installed with the bottom of the vent no lower than the compressor shelf. Higher than the compressor shelf is allowed, but for optimum service access as close as possible to the compressor shelf height is recommended.
- Fit an air deflection plate (fig. 6 4, page 14) above the compressor so that the heat does not accumulate in the vehicle.

Installation with one lower rear vent and one roof vent

NOTE
This installation method is satisfactory for refrigerator performance, but not the preferred method due to lack of service access to the compressor shelf area.

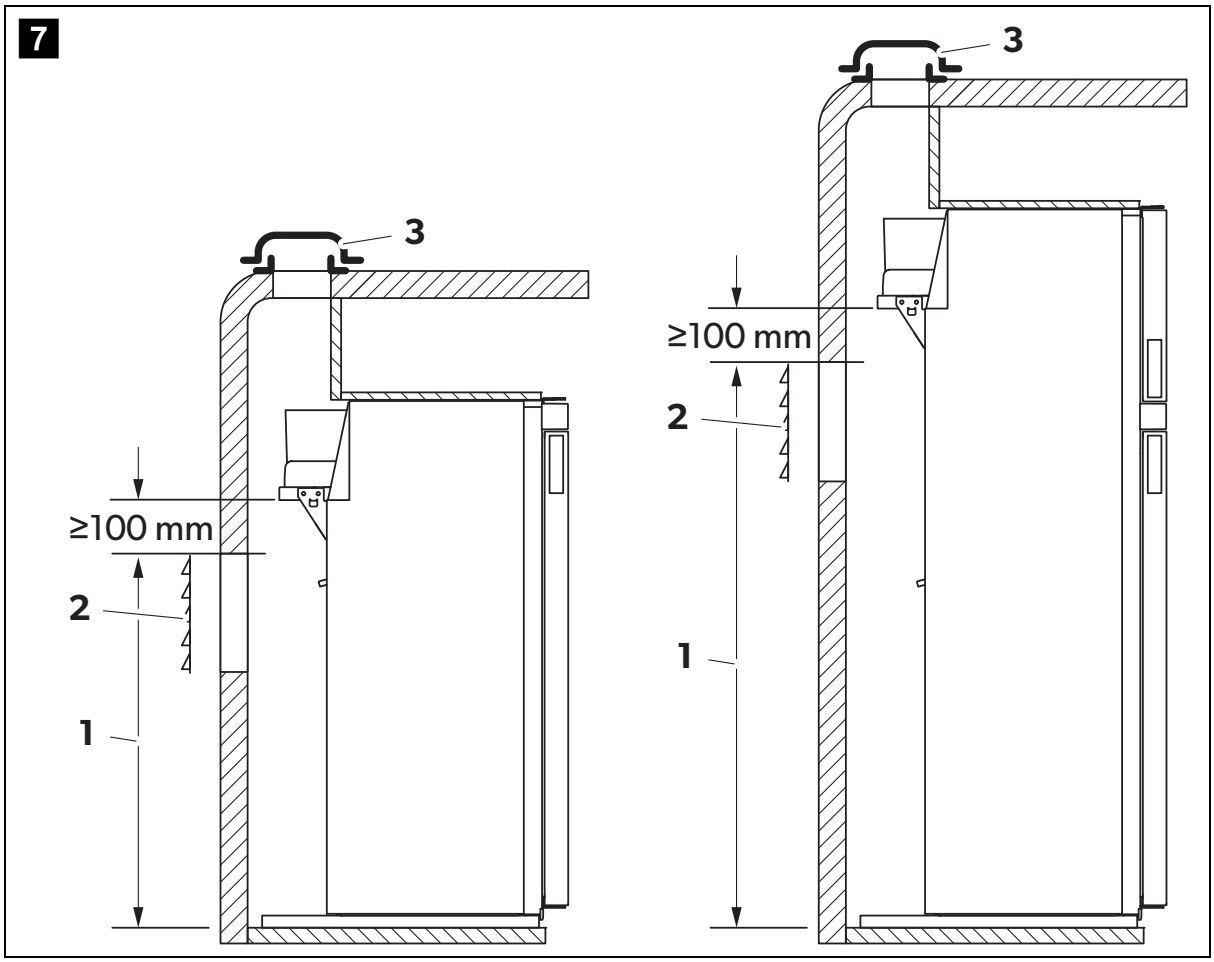

Pos. in fig. 7, page 15	Description
1	Maximum height is equal to 100 mm below the compressor shelf
2	LS 300 ventilation grille
3	Roof vent

- A roof vent may be installed instead of the air outlet vent.
  - The roof vent should be installed directly above the back of the refrigerator as far as this is possible. Use an air duct if you need to install the roof vent (fig. 7 3) offset, otherwise heat will accumulate there.

7.2 Installing the refrigerator in a sealed location separate to the living space

It is recommended to install the refrigerator in a sealed location in order to prevent dust and heat from entering the living space of the caravan or motorhome.

A suitable seal must be provided and fitted to the bottom surface of the refrigerator. The purpose is to provide a seal between the interior of the vehicle and the cooling unit and ventilation area behind the refrigerator.

WARNING! Fire hazard!
Do not use flammable materials such as silicone sealants, foam or similar for the draught-proof installation.

The manufacturer has applied a sealing strip to the rear surface of the front frame.

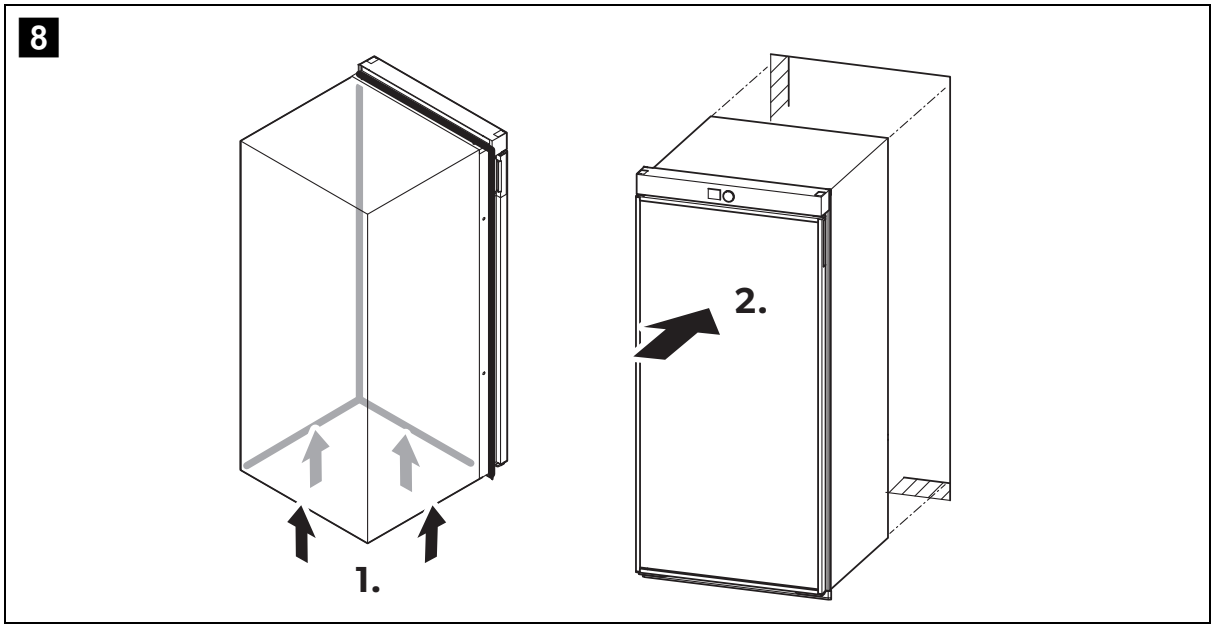

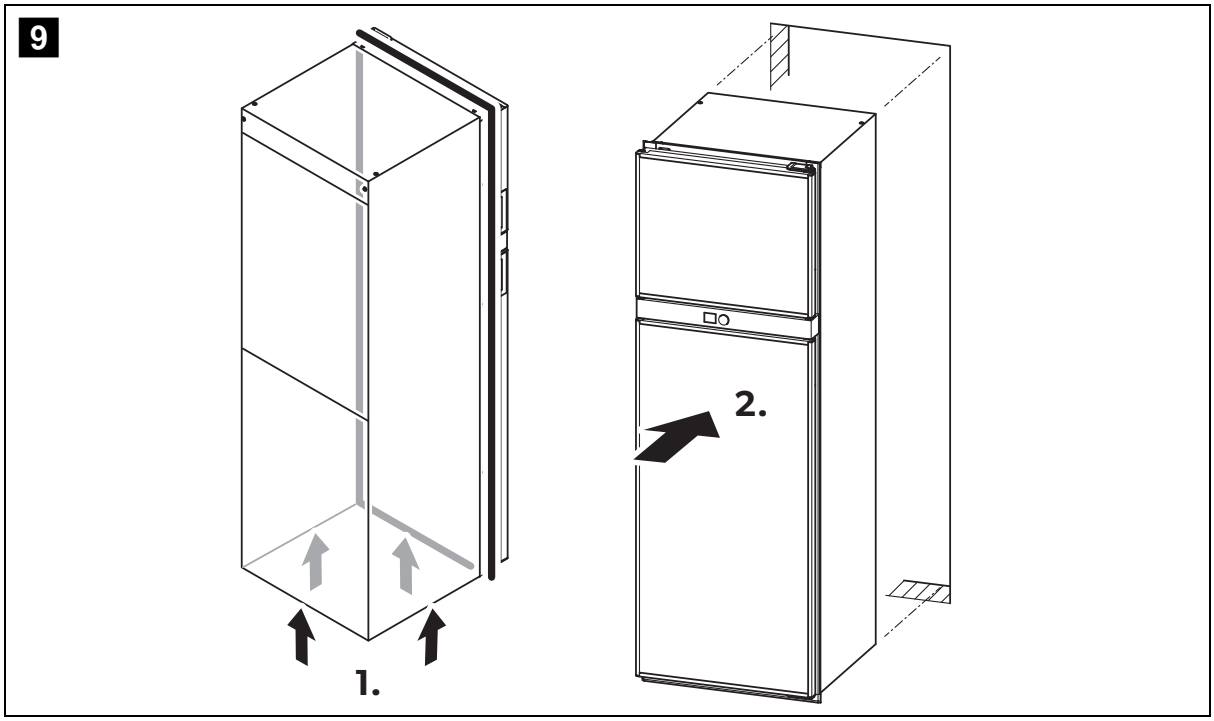

➤ Apply the sealing strip to all four sides of the bottom surface of the refrigerator (**1.** in fig. **8** and fig. **9**).

➤ Push the refrigerator into position (**2.** in fig. **8** and fig. **9**). This then seals the space behind the refrigerator to the interior of the vehicle.

OPTIONAL:

➤ If the refrigerator stands on a platform, install the bottom trim piece in order to seal the space between the refrigerator and the platform.

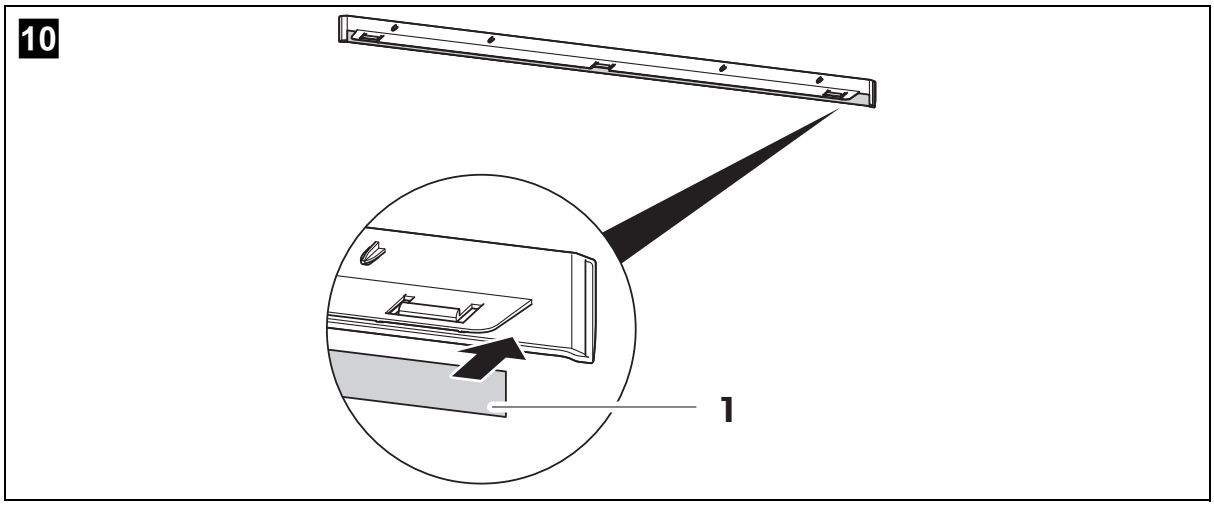

– A sealing strip (fig. **10** 1) is applied to the lower surface of the bottom trim piece.

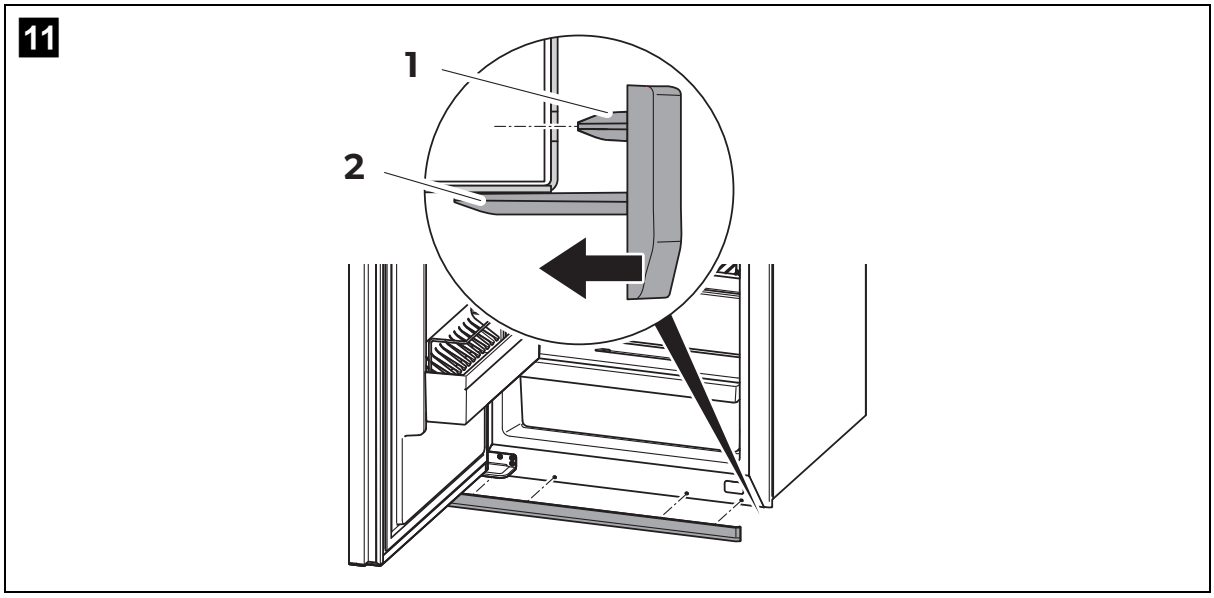

– Push the bottom trim piece with the four plugs (fig. 11 1) into the holes on the front frame of the refrigerator.
– Snap the three catches (fig. 11 2) into the holes under the bottom frame of the refrigerator.

7.3 Installing the drain water hose

➤ To avoid damage to the drain water hose, position the hole for the drain water hose in a way that the hose does not kink.

➤ Drill a hole through the vehicle floor at the rear of the refrigerator.

➤ Install the drain water hose through the drilled hole. Ensure that the drain water hose is long enough in order to drain the water outside of the vehicle.

➤ DO NOT shorten the drain hose. The excess length will enable partial extraction of the refrigerator if required for service access.

➤ Ensure that the drain water hose is not kinked.

➤ Seal the area around the drain water hose.

7.4 Installing the ventilation grille

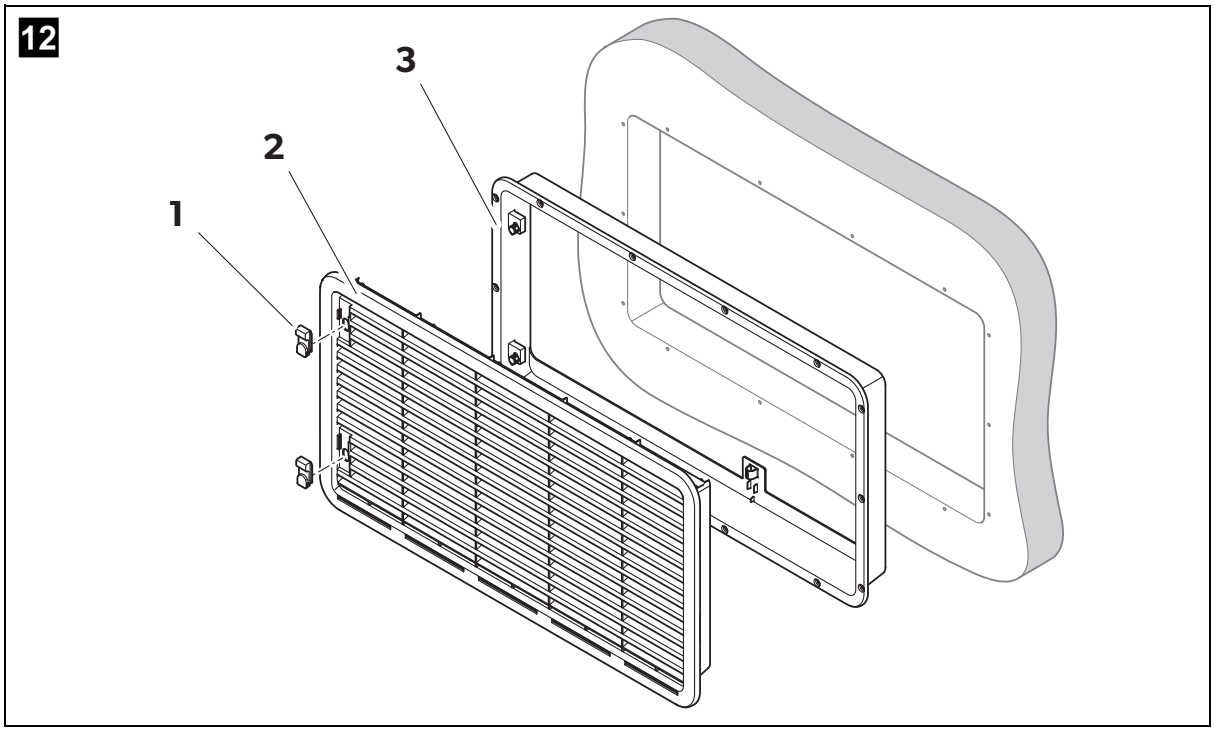

No. in fig. 12	Description
1	Slider
2	Ventilation grille
3	Installation frame

➤ Make a cut out in the wall to fit an appropriate upper and lower vent system, choose LS 300 check the dimensions required for the vent. See chapter "Preparing the installation" on page 12.

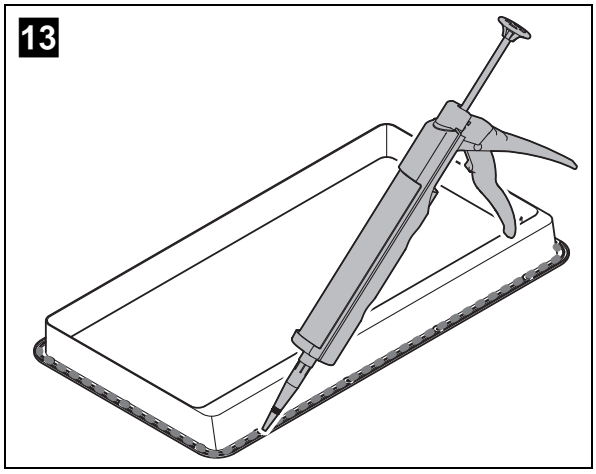

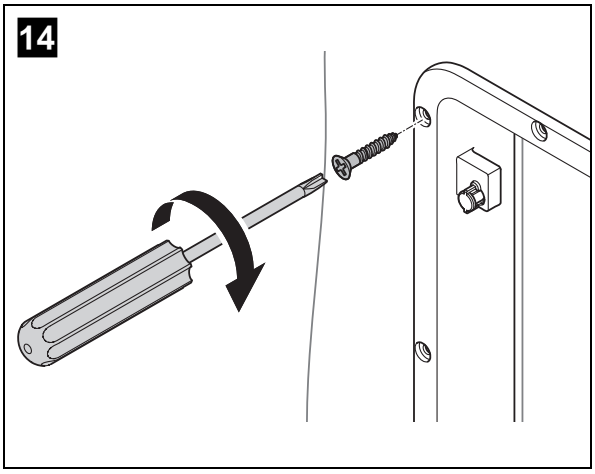

➤ Ensure the installation frame is water resistant (fig. 13).

➤ Insert the installation frame and screw it down tightly (fig. 14). Use all the fixing holes for this.

15

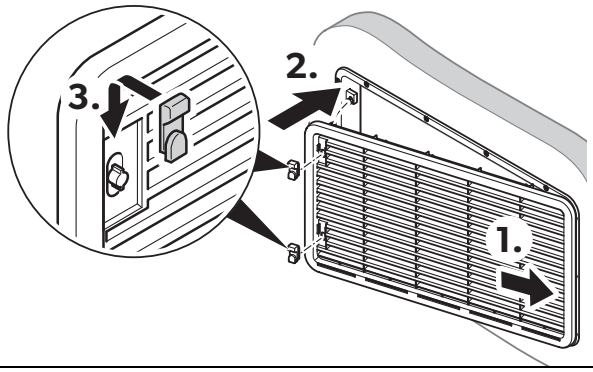

➤ Fit the ventilation grille (**1.** and **2.** in fig. 15).

➤ Insert the slider and lock the ventilation grille with it (**3.** in fig. 15).

7.5 Install the roof vent

16

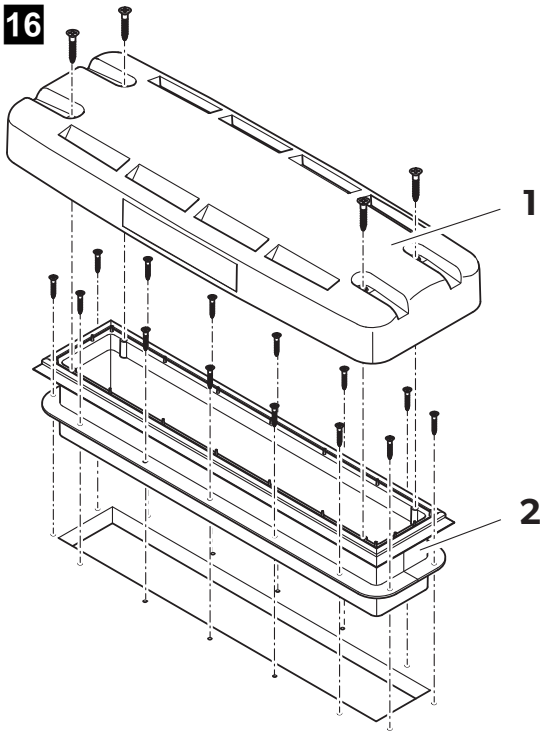

17

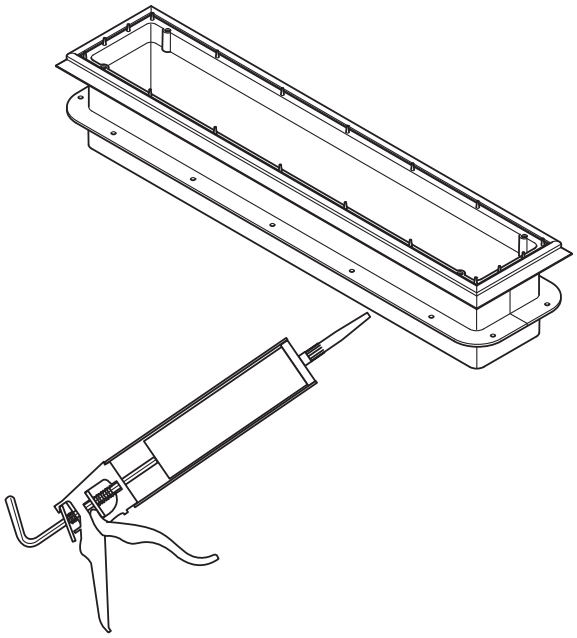

No. in fig. 16	Description
1	Hood
2	Installation frame

➤ Cut out a section in the roof. Refer to the roof vent instruction manual for the required dimensions. When doing so, observe the information, see chapter "Preparing the installation" on page 12.

➤ Ensure the installation frame is water resistant (fig. 17).

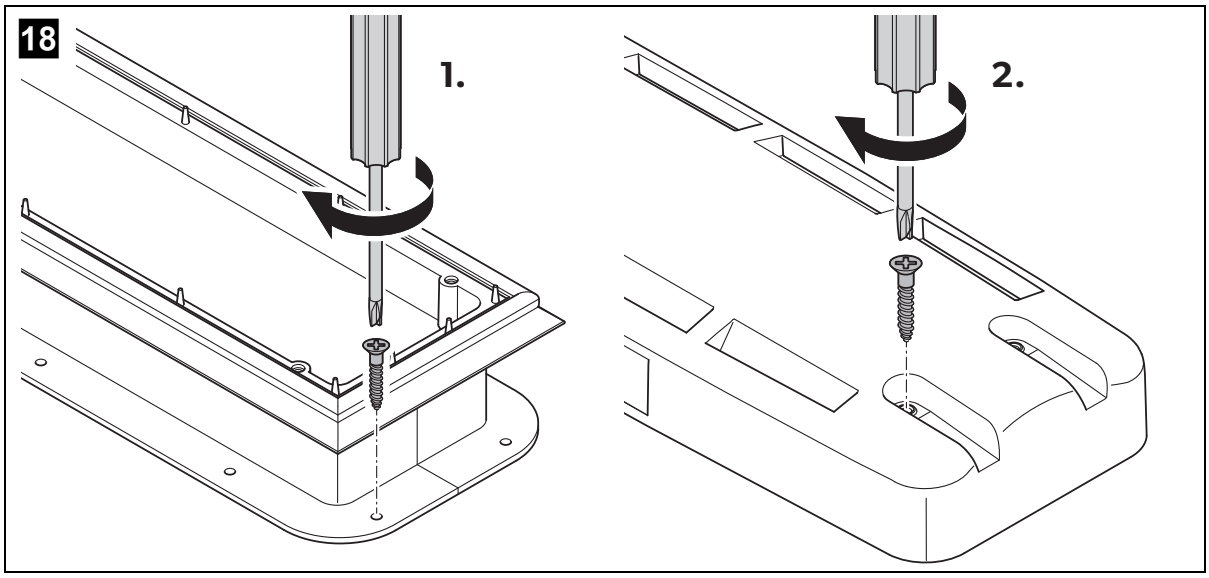

➤ Insert the installation frame and screw it down tightly (fig. 18 1). Use all the fixing holes for this.

➤ Insert the hood and screw it down tightly (fig. 18 2).

7.6 Securing the refrigerator

CAUTION!
Only screw through the bushes built into the refrigerator, otherwise foamed components, including electrical wiring, can be damaged.

NOTE
Ensure that the screws are tight, even when under increased loads (while driving).

➤ Push the refrigerator firmly into its final location with the front flange sitting hard against the recess front.

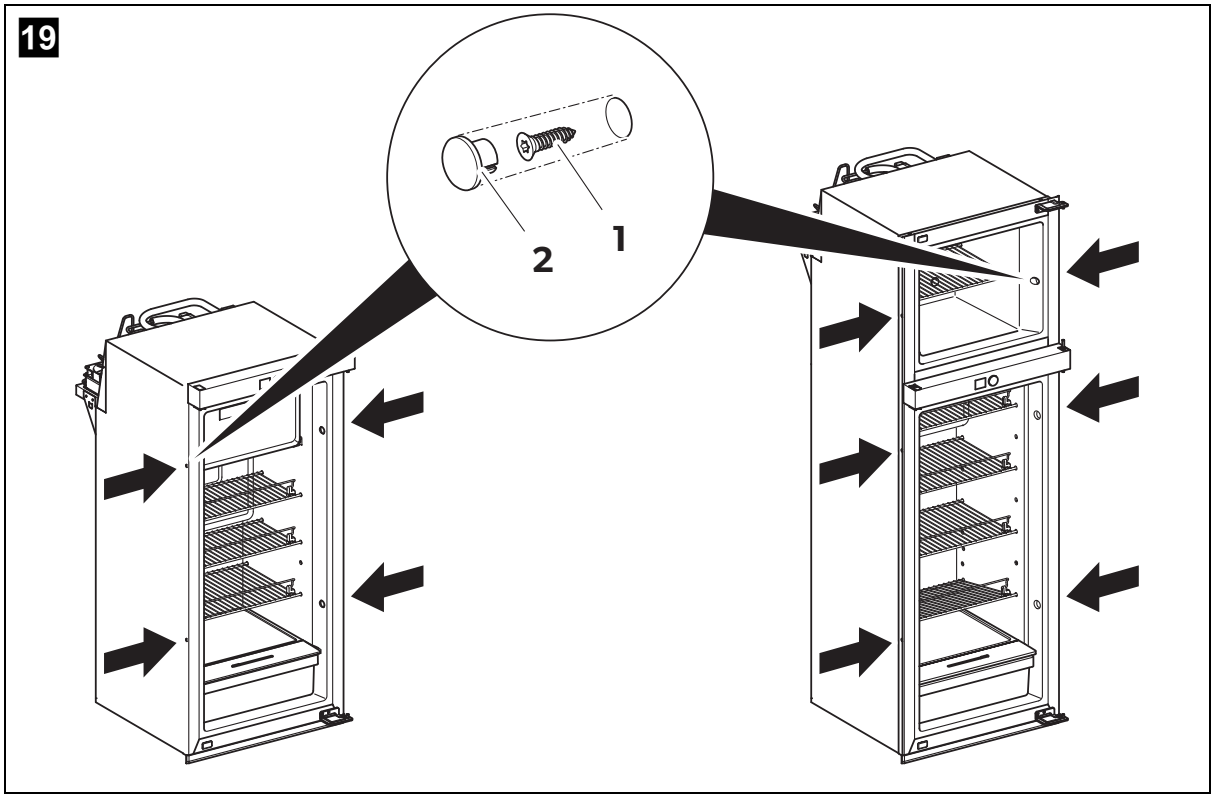

➤ Push the screws (fig. 19 1) through the plastic bushes in the sides of the refrigerator, and fasten into the recess walls.

➤ Fit the caps (fig. 19 2) into the bushes.

8 Connecting the refrigerator

8.1 Connecting the refrigerator to 12 – 24 V

NOTICE!

- To avoid voltage drops and loss of performance, keep the connection cable as short as possible and uninterrupted. Therefore avoid additional switches, plugs or power strips.

The refrigerator can be operated with a 12 V or 24 V DC voltage supply.

For safety reasons, the refrigerator is equipped with an electronic system to prevent the polarity being reversed. This protects the refrigerator against reversed polarity when connecting to a battery and against short circuiting.

To protect the battery, the refrigerator switches off automatically if the voltage is insufficient (see table below).

	12 V	24 V
Cut-off voltage	10.4 V	22.8 V
Cut-in voltage	11.7 V	24.2 V

20

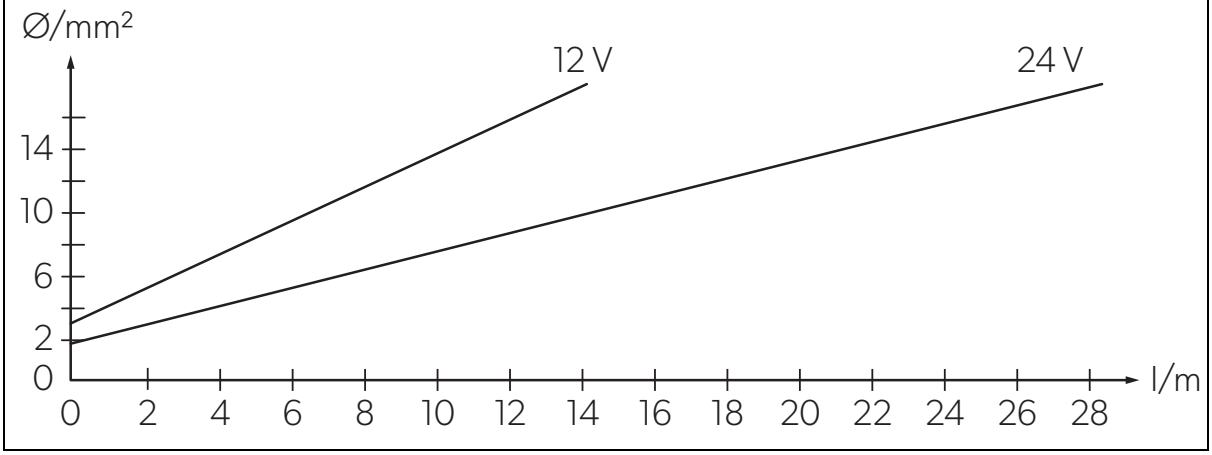

➤ Determine the required cross section of the cable in relation to the cable length according to the figure above.

Key to the figure

Coordinate axis	Meaning	Unit
l	Cable length	m
∅	Cable cross section	mm^2

NOTICE!
Make sure the polarity is correct.

➤ Before starting up the device for the first time, check whether the operating voltage and the battery voltage match (see type plate).

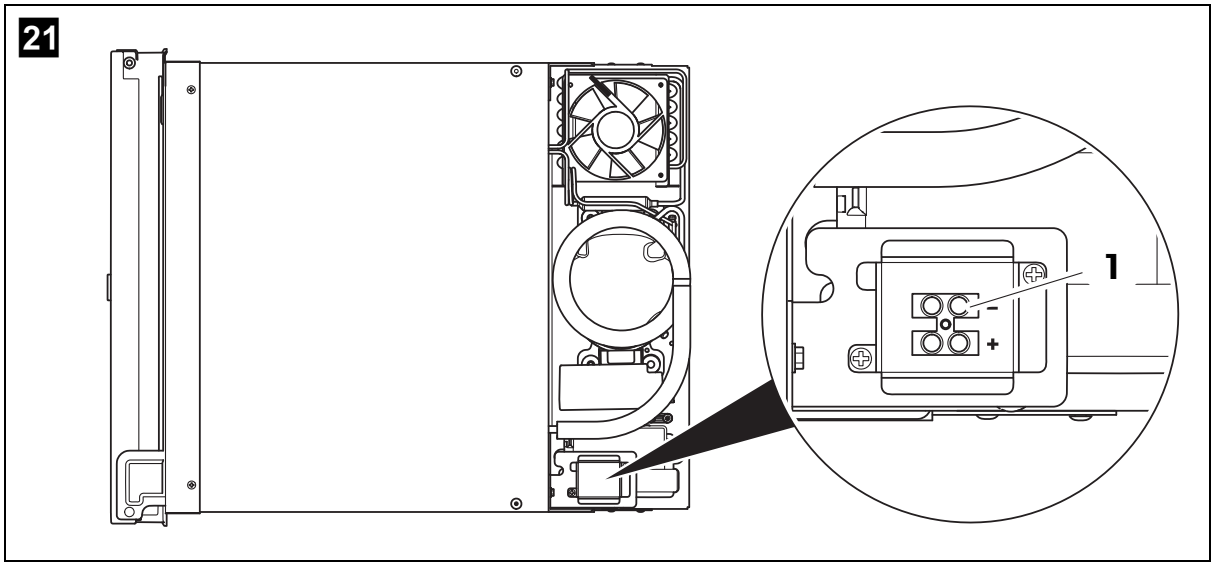

➤ Connect the cable to the refrigerator DC terminal block (**1**).

➤ Connect the refrigerator
- as directly as possible to the poles of the battery
- with fuse protection fitted to the positive (+) side of the supply cable of 15 A (at 12 V) or 7.5 A (at 24 V).

8.2 Connecting the refrigerator to AC mains

DANGER! Danger of fatal injury!
- Never handle plugs and switches with wet hands or if you are standing on a wet surface.
- If you are operating your refrigerator on a boat with an AC mains connection using a shore connection, you must install a residual current circuit breaker between the AC mains and the refrigerator. Seek advice from a trained technician.

Proceed as follows when you connect the refrigerator to the AC mains:

➤ Plug the connector into the AC socket.

9 Using the refrigerator

NOTICE!

- Make sure that you only put items in the refrigerator which may be kept at the selected temperature.
- Make sure that items in the refrigerator do not block the openings of the cooling ventilation areas in the main compartment
- Foodstuff may only be stored in its original packaging or in suitable containers.

NOTE

- Before starting your new refrigerator for the first time, you should clean it inside and outside with a damp cloth for hygienic reasons.
- The cooling performance can be affected by:
  - the ambient temperature (e.g. when the vehicle is exposed to direct sunlight)
  - the amount of food to be conserved
  - how often you open the door
- When using the refrigerator for the first time, there may be a mild odour which will disappear after a few hours. Air the living space well.
- Park the vehicle so that it is level, especially when starting up and filling the refrigerator before setting off on a journey.
- Battery management systems switch off the power supply to the refrigerator as soon as the vehicle engine is switched off for longer than 30 minutes. The refrigerator requires a constant DC power supply to operate. If your vehicle has a battery management system, deactivate it.

9.1 Tips for using the refrigerator optimally

When the temperature in the interior of the refrigerator exceeds +4 °C, the shelf life of goods that spoil quickly cannot be guaranteed. To attain an optimal cooling capacity in the interior of the refrigerator, observe the following information:

- Protect the interior of the vehicle from warming up excessively (e.g. sunshades in the windows, air conditioner).

- Protect the refrigerator from direct sunlight (e.g. sunshades in the windows).
- Voltage fluctuations can have a negative effective on the cooling capacity. Check the cooling performance of refrigerator regularly
  - when using DC current during the journey
  - when using AC current at the site of use

9.2 Energy saving tips

- Choose a well ventilated location which is protected from direct sunlight.
- Allow warm food to cool down first before keeping it cool in the refrigerator.
- Do not open the refrigerator more often than necessary.
- Do not leave the doors open for longer than necessary.
- Defrost your refrigerator as soon as a layer of ice forms in the freezer compartment.
- Avoid unnecessarily low temperature settings.
- Arrange the food in the refrigerator so that air can circulate inside.
- Leave a distance of at least 10 mm between the contents and ventilation openings on the vent cover.

9.3 Switching on the refrigerator

➤ Press and hold the control knob for more than 3 seconds.

✓ The refrigerator starts with the last selected settings.

9.4 Menu overview and navigation

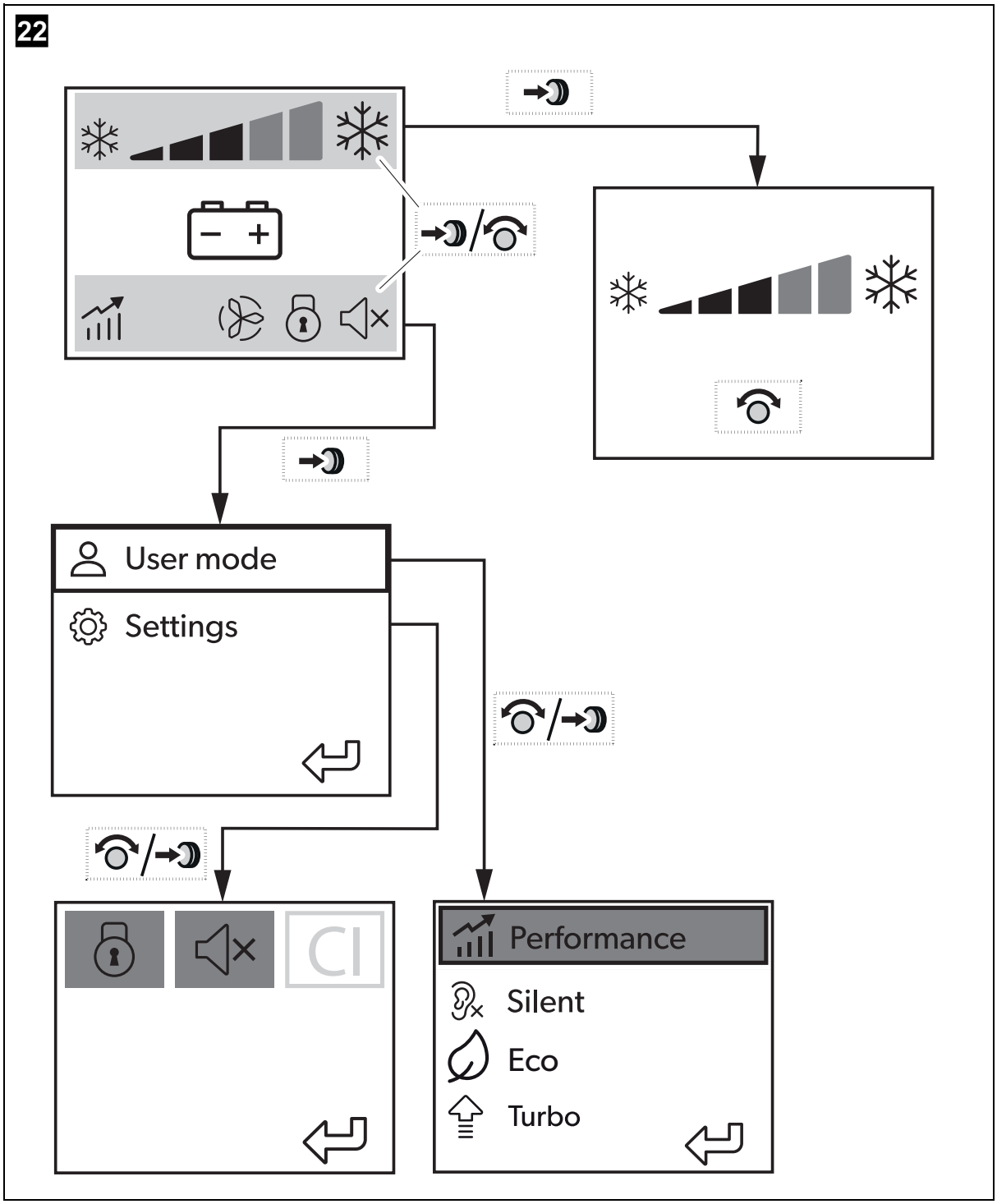

➤ Turn/press the control knob on preferred setting and user mode option.

✓ The colour turns blue when selected.

➤ Press again to deselect.

9.5 Display

By default the display shows the following main menu:

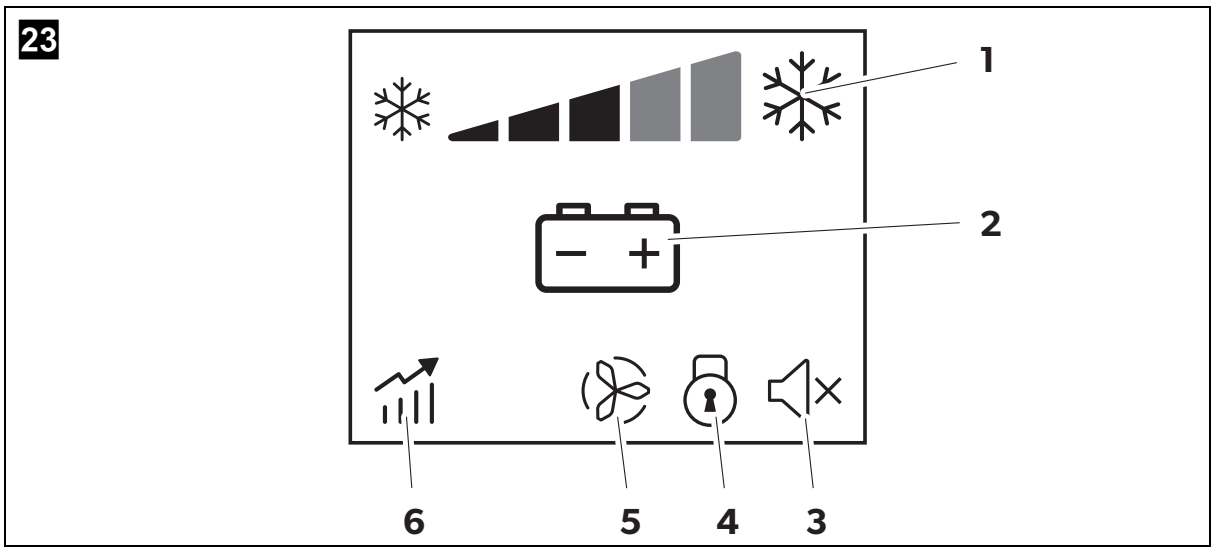

No. in fig. 23		Description
1		The temperature bars show the set temperature: Lowest bar: lowest cooling function (warmest inner temperature) Highest bar: highest cooling function (coldest inner temperature) Blue snowflake: compressor is on. White snowflake: compressor is off.
2		Displays the currently used energy source. If the refrigerator is connected to AC and DC power supply at the same time, the AC power supply is preferred.
3		Beep off: No sound indication for extended door openings or error conditions.
		Beep on: Sound indication for extended door openings or cooling function error conditions.

No. in fig. 23		Description
4		The child lock is selectable by user to prevent accidental adjustments or children from using the controls. The lock activates approx. 10 seconds after the last control knob touch and the display dims. Temporary override: Push the control knob 3 times within 1.5 seconds to unlock the controls temporarily. After 10 seconds without touching the control knob, the child lock is reactivated. Permanent deactivation: First temporarily override, then turn the child lock off in the settings menu.
5	1	These symbols show the speed level of the outer fan: 1 = low speed 2 = high speed
	2	
6		These symbols show the active user mode of the refrigerator:
		Performance mode (factory default mode): Uses all functionalities of the refrigerator automatically for optimised performance. The temperature can be set to levels 1-5.
		Silent mode: The outer fan operates at low speed and the compressor speed is limited. The temperature setting is limited to levels 1-3. **Note:** In high ambient conditions the silent mode cooling performance may not suit some users.
		Eco mode: The temperature setting is fixed at level 3 and defrost function is disabled.

No. in fig. 23		Description
6		Turbo mode: The coldest setting (level 5) is activated. The outer fan and compressor operate at high speed and the defrost function is disabled. Turbo mode is active for 12 hours or until the refrigerator reaches a temperature of –2 °C. After that, the control switches to performance mode automatically. After switching to performance mode, the temperature setting remains at level 5. At this point the temperature can be set to levels 1-5 to suit ongoing requirement.

NOTE - inner fan

- All cooling modes: the inner fan switches off when the refrigerator door is opened.
- Performance/Silent/Turbo modes: the inner fan cycles on/off with the compressor.
- Eco mode: the inner fan remains on during compressor off cycles.

9.6 Settings screen (fig. 24)

24

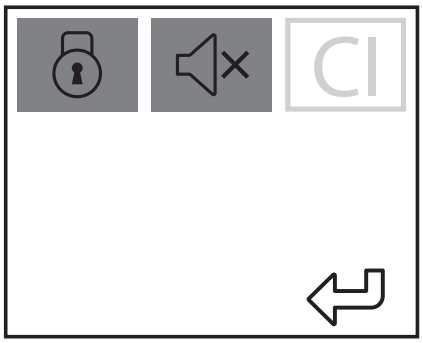

Symbol	Description
	Child lock
	Beep off
CI	CI-Bus: Not applicable on this model

9.7 User modes

The following table shows the user modes and their settings:

User mode	Symbol	Compres-sor speed	Outer fan	Defrost	Temperature setting	Duration
Performance		Auto	Auto	Auto	Levels 1 – 5	ongoing
Silent		Limited	Low	Auto	Levels 1 – 3	ongoing
Eco		Auto	Auto	Off	Level 3	ongoing
Turbo		High	High	Off	Coldest level (5)	max. 12 hours

9.8 Display dimming functions (fig. 25)

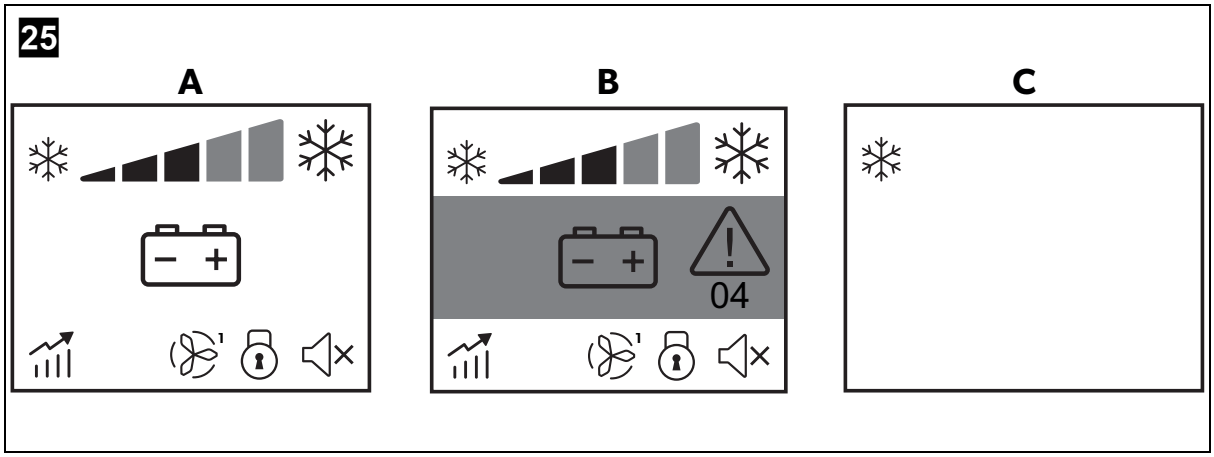

If there is no operation on control knob within 10 seconds, the backlight will be dimmed and the display will return to idle screen (**A**). After another 3 minutes without operation, the screen will enter standby (**C**) on which a snowflake appears in the top left corner to indicate that the refrigerator is on.

If there is an active error indication, the backlight and screen will not turn off. The display enters error screen (**B**). In the error screen, the middle section is highlighted in red and shows the relevant error code (see chapter “Troubleshooting” on page 52).

9.9 Opening the refrigerator door/freezer compartment door

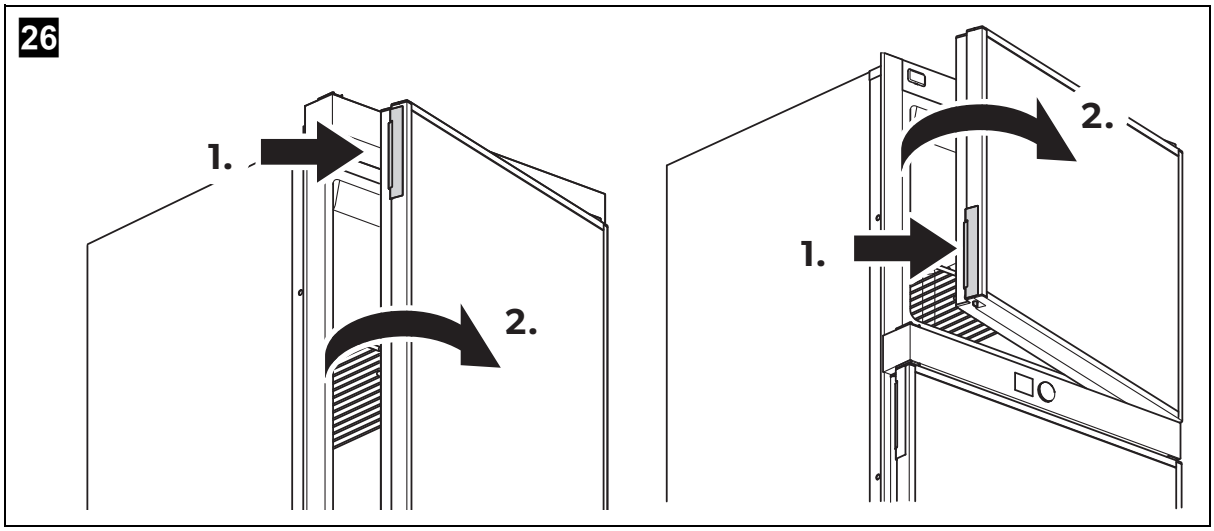

CAUTION!

- Always close and lock the refrigerator before starting the journey.
- Open the refrigerator doors carefully, because goods may have shifted and could fall out.

➤ Press the handle and pull the door open.

9.10 Locking the refrigerator door/freezer compartment door

➤ Ensure the locking catch is in the normal use position and not in the airing function position (fig. 29, page 35).

➤ Press the door shut until you hear it clearly click.

✓ The door is now closed and locked for travelling.

9.11 Notes on storing food

CAUTION!
Only store heavy objects such as bottles or cans in the refrigerator door, in the vegetable compartment or on the bottom shelf.

The refrigerator compartments are recommended for the following types of food:

27

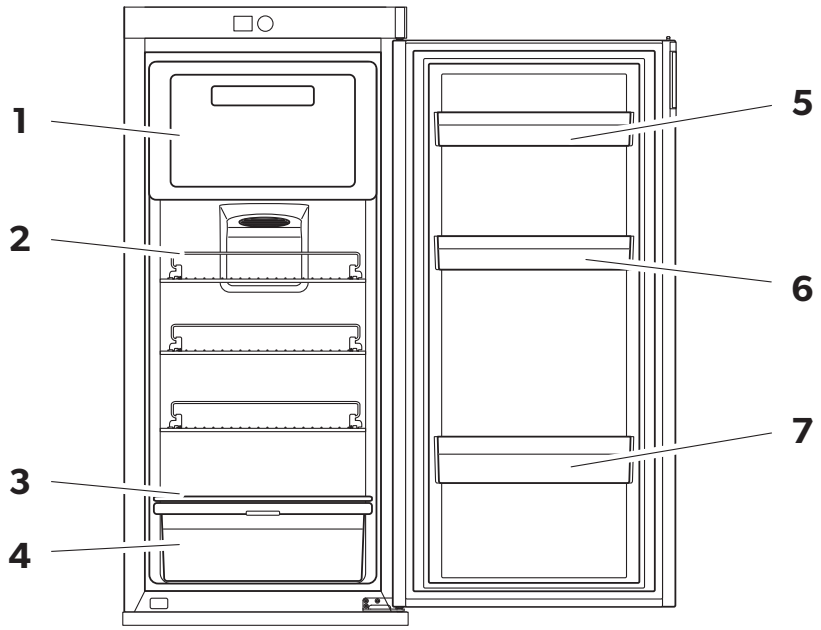

28

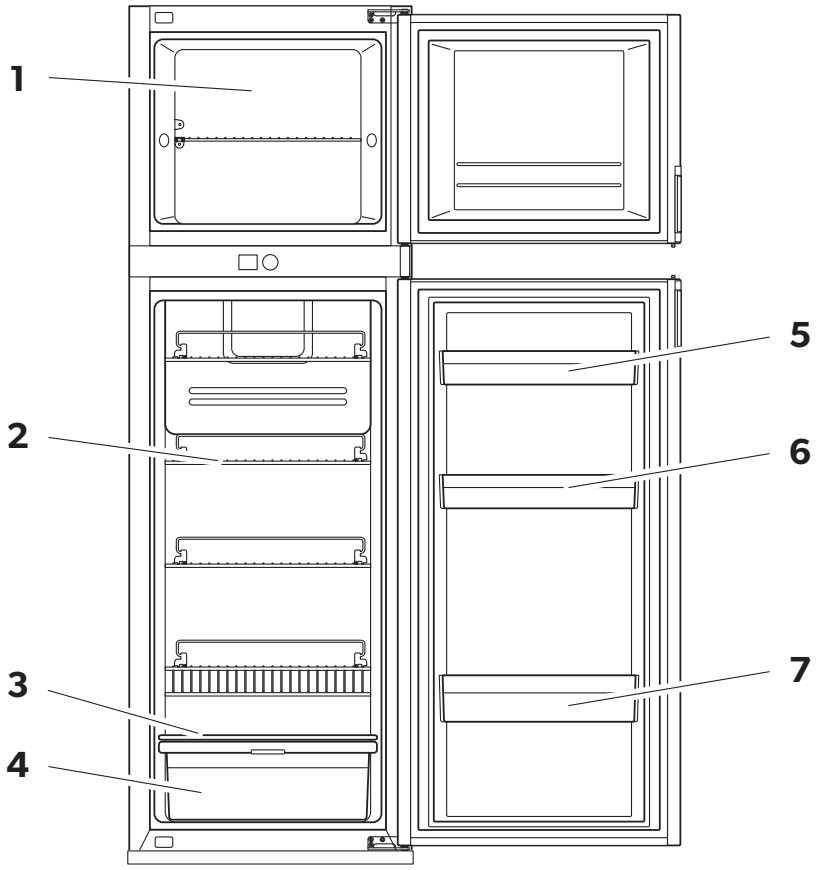

No. in fig. 27 and fig. 28	Food
1	Frozen food
2	Dairy products, ready-made meals
3	Meat, fish, items for defrosting
4	Salad, vegetables, fruit
5	Eggs, butter
6	Dressing, ketchup, jam
7	Drinks in bottles or cartons

Please observe the following instructions for storing items:

NOTE

- Do not keep carbonated drinks in the freezer compartment.
- The freezer compartment is suitable for making ice cubes and for keeping frozen food short-term. It is not suitable for long-term food storage.
- Pack raw and cooked items separately.
- Observe the expiry date on the packaging.
- Do not leave refrigerated items outside the refrigerator for too long.
- Clean the inside of the refrigerator at regular intervals.

9.12 Switching off the refrigerator

➤ Press and hold the control knob for more than 3 seconds.

✓ The display goes blank and the refrigerator is switched off completely.

➤ If you do not intend using the refrigerator for an extended period of time, disconnect the DC power supply.

9.13 Using the Door Airing Function

NOTE
Use the door airing function if you do not intend to use the refrigerator for a prolonged period of time. This prevents mould from forming when the refrigerator is not in use or put into storage.

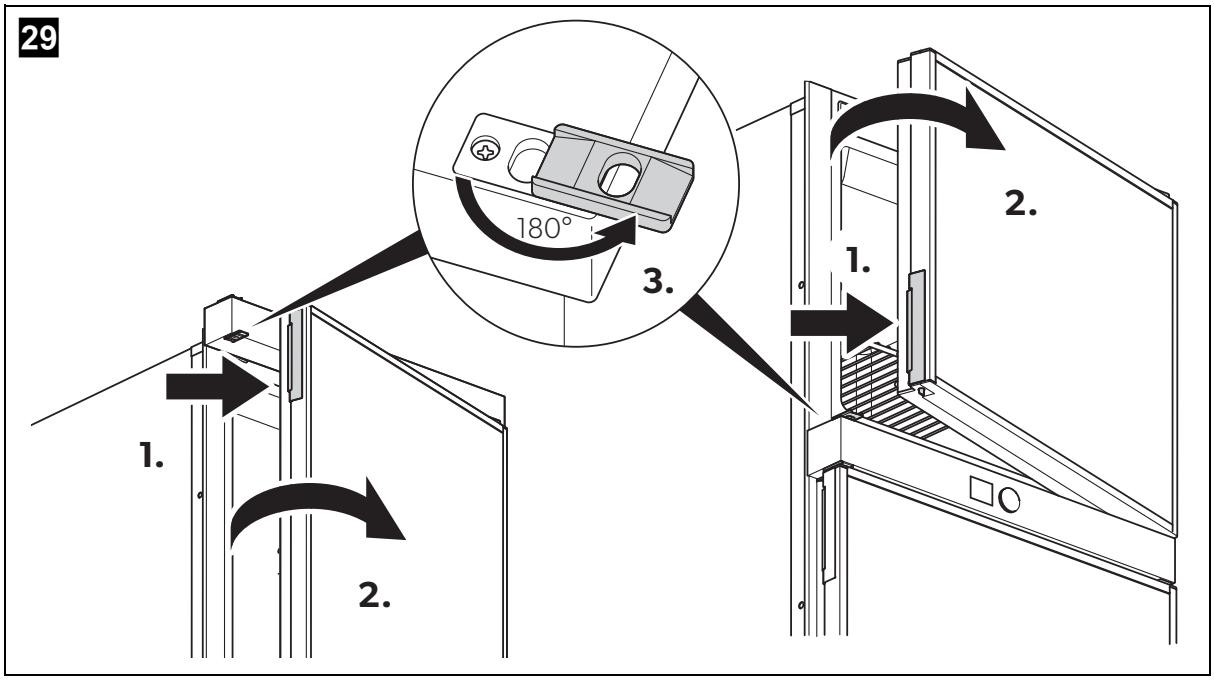

➤ Rotate the locking catch 180° to latch the doors slightly opened (fig. 29).

9.14 Removing and refitting the shelves

Removing the shelves

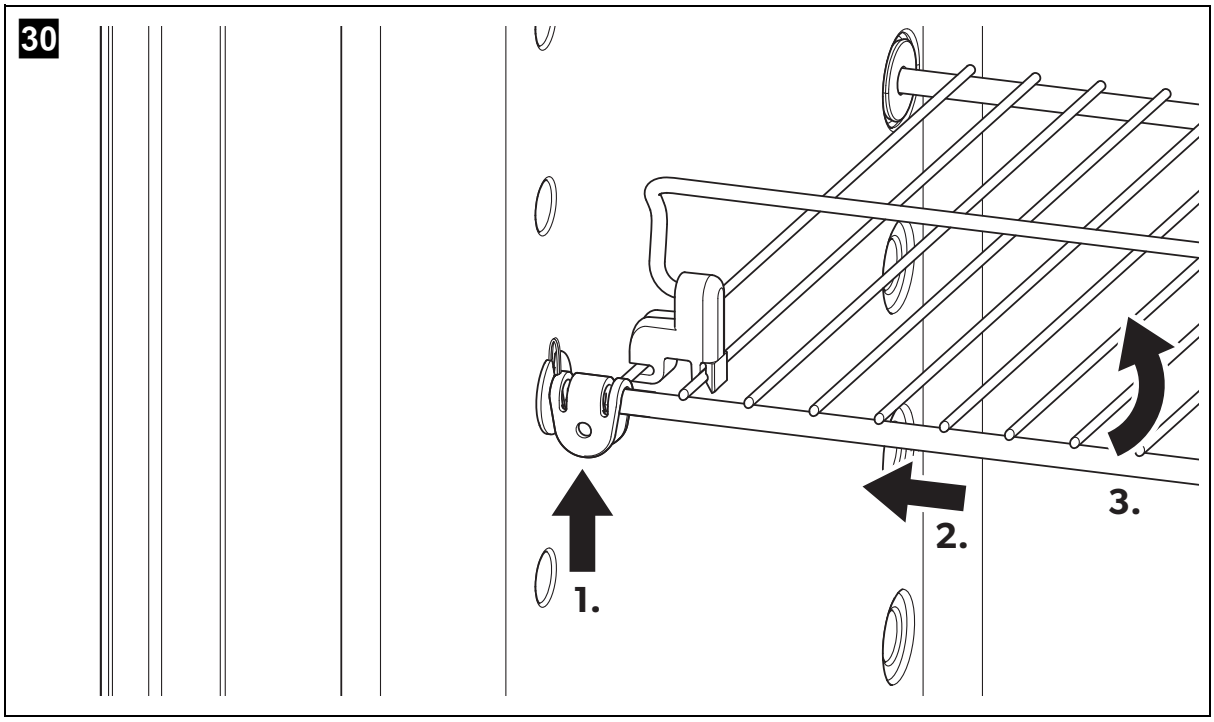

➤ Push the shelf locks off the left end of the wire shelf (**1.**).

➤ Slide the shelf to the left until it is clear on the right side (**2.**).

➤ Tilt the right end of the shelf up (**3.**).

➤ Remove the shelf by pulling it forward.

Refitting the shelves

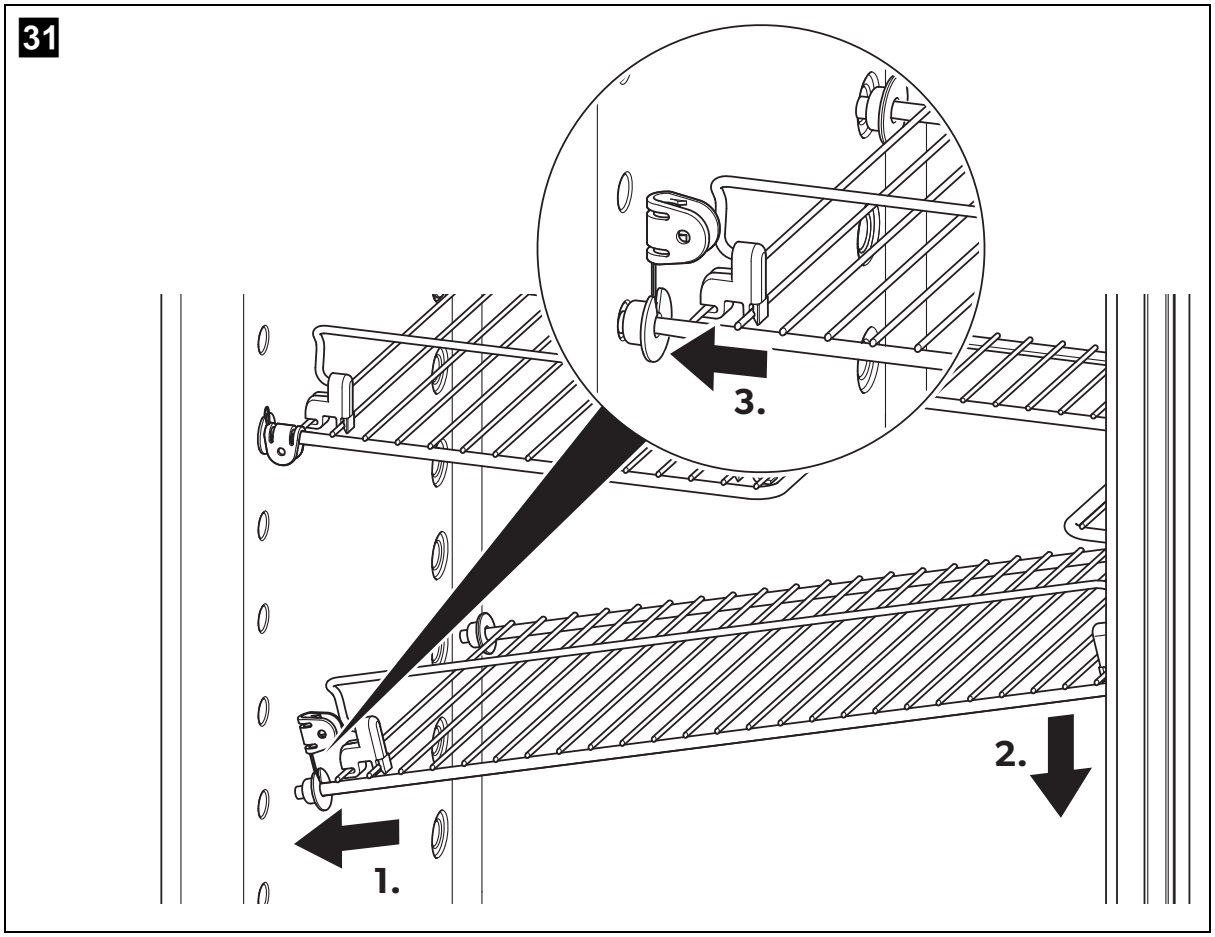

➤ Position the shelf in the desired location.

➤ Insert the ends of the shelf on the left (**1.**).

➤ Slide the shelf into the holes on the right (**2.**).

➤ Slide the plastic plugs into the holes in the wall (**3.**).

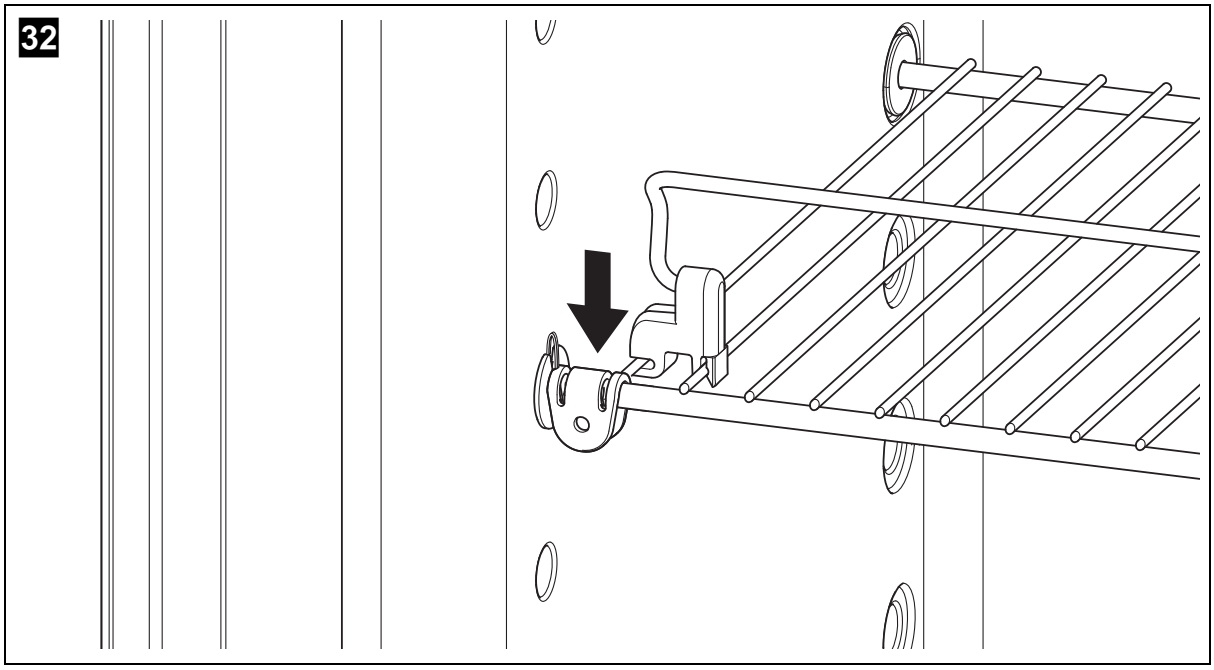

➤ Snap the shelf locks onto the shelf.

Positioning the bottle shelf

NOTE
The two bottom shelf positions can be fitted into an optional bottle shelf configuration which slopes down toward the rear.

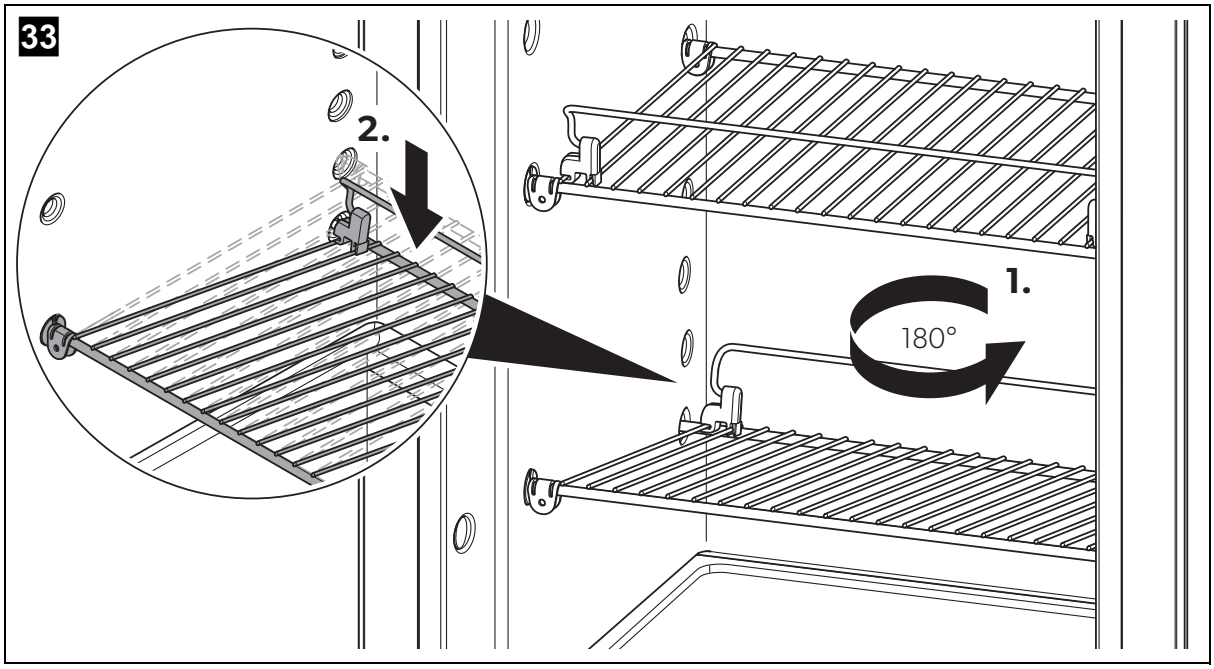

➤ Remove the shelf and rotate 180 degrees (**1.**).

➤ Relocate the rear of the shelf to the bottle shelf position (**2.**).

9.15 Defrosting the refrigerator manually

NOTICE!
Never use mechanical tools to remove ice or to loosen objects stuck to the device.

NOTE
- The refrigerator compartment has an automatic cyclic defrost system, which prevents excessive frost forming on the evaporator fins. However, if the refrigerator is used for extended periods in high humidity and/or high ambient temperature conditions, frost may build up on the evaporator fins behind the internal fan cover, which can reduce the cooling performance. In this case a manual defrost is recommended.
- The freezer compartment will require periodic manual defrosting, recommended if the frost layer is higher than 3 mm.

➤ Disconnect the power supply.

➤ Empty the contents.

➤ Put a cloth in the freezer compartment and the refrigerator to absorb any excess water.

➤ Leave the doors open.

✓ The condensate drains off through a hose at the back of the refrigerator and is routed outside the vehicle.

➤ Wipe both compartments dry with a cloth.

9.16 Replacing the door panel

Removing the door panel

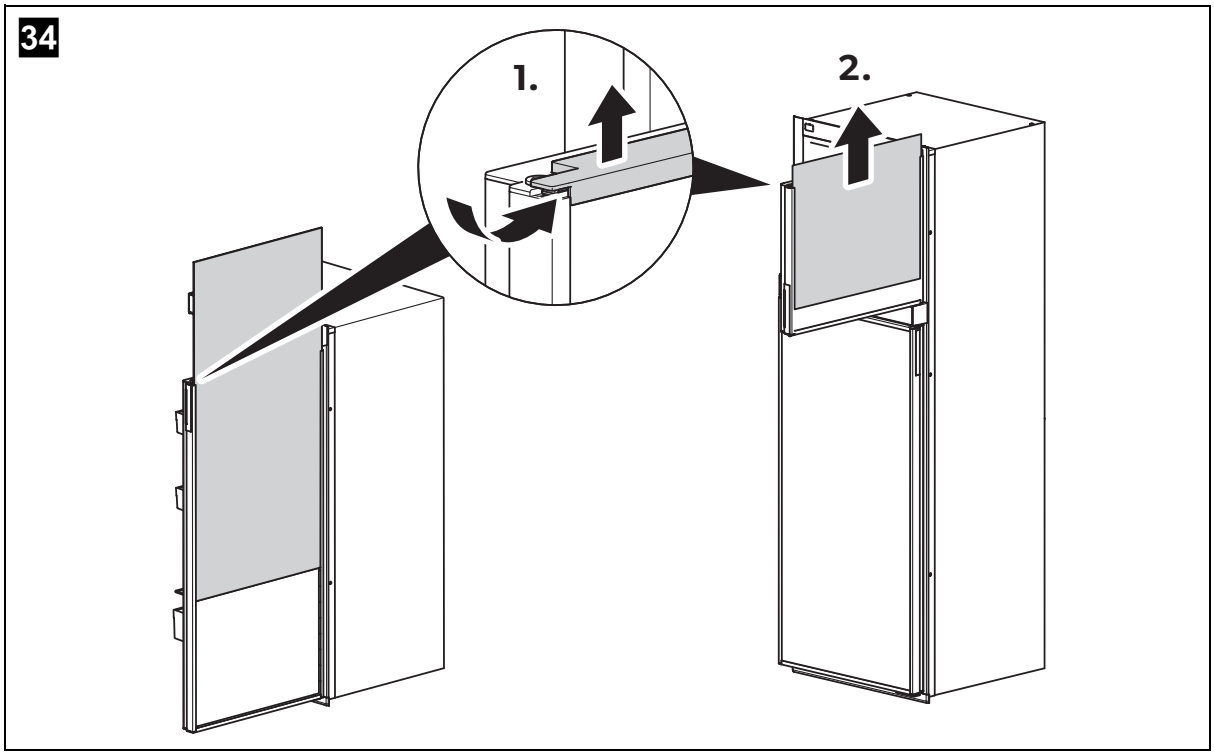

Proceed as follows (fig. **34**):

➤ Open the door 90 degrees.

➤ Remove the door top decoration strip by gently pushing upward by hand (**1.**).

➤ Pull the old panel upward (**2.**).

Installing the new door panel

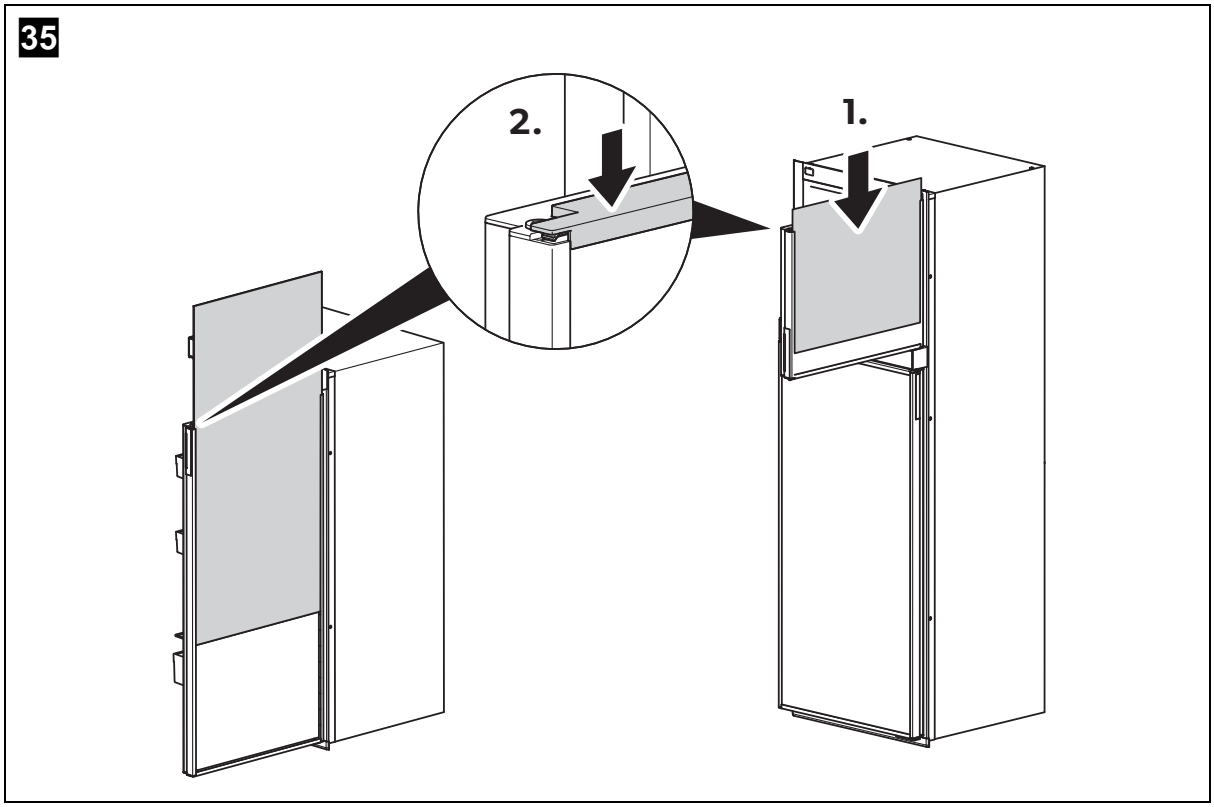

Proceed as follows (fig. **35**):

- ➤ Push the new panel downwards into the door. Ensure, that the vertical edges fit into the grooves of the door frame (**1.**).
- ➤ Push the new panel downwards until the lower horizontal edge of the panel fits into the bottom groove.
- ➤ Snap in the decoration strip (**2.**).

9.17 Reversing the door for RUC 5208X

NOTE
For RUC 5208X door reversal, an accessory hinge and latch kit is required (not included). Contact your Dometic dealer for details.

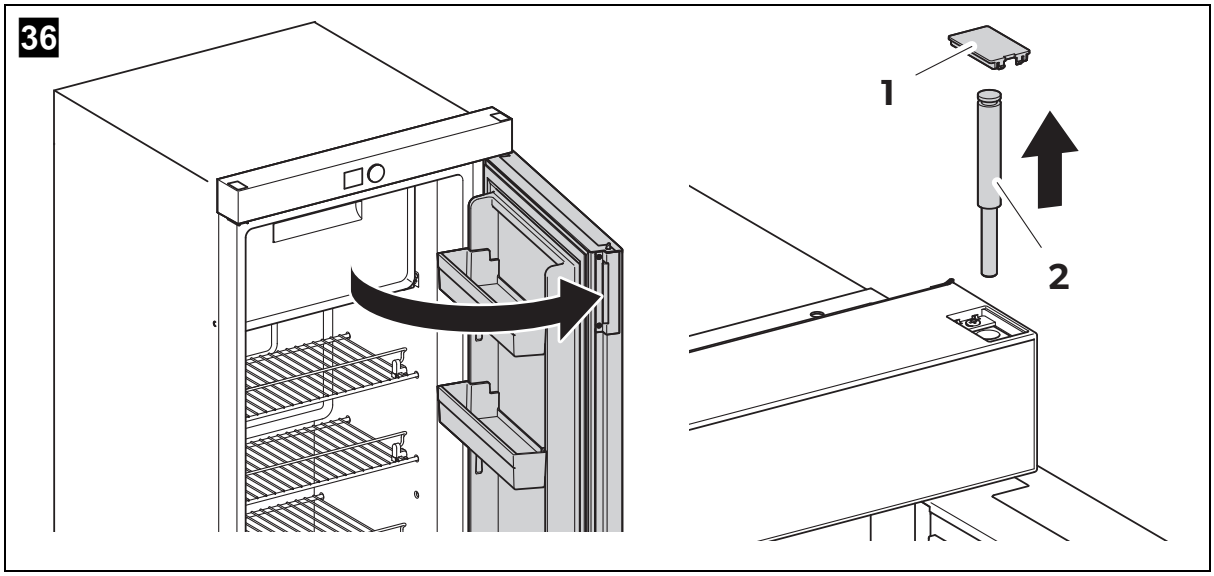

➤ Open the door.

➤ Remove the top hinge pin cover (fig. 36 1) using a small blade screwdriver.

➤ Pull out the top hinge pin (fig. 36 2) with a pair of pliers.

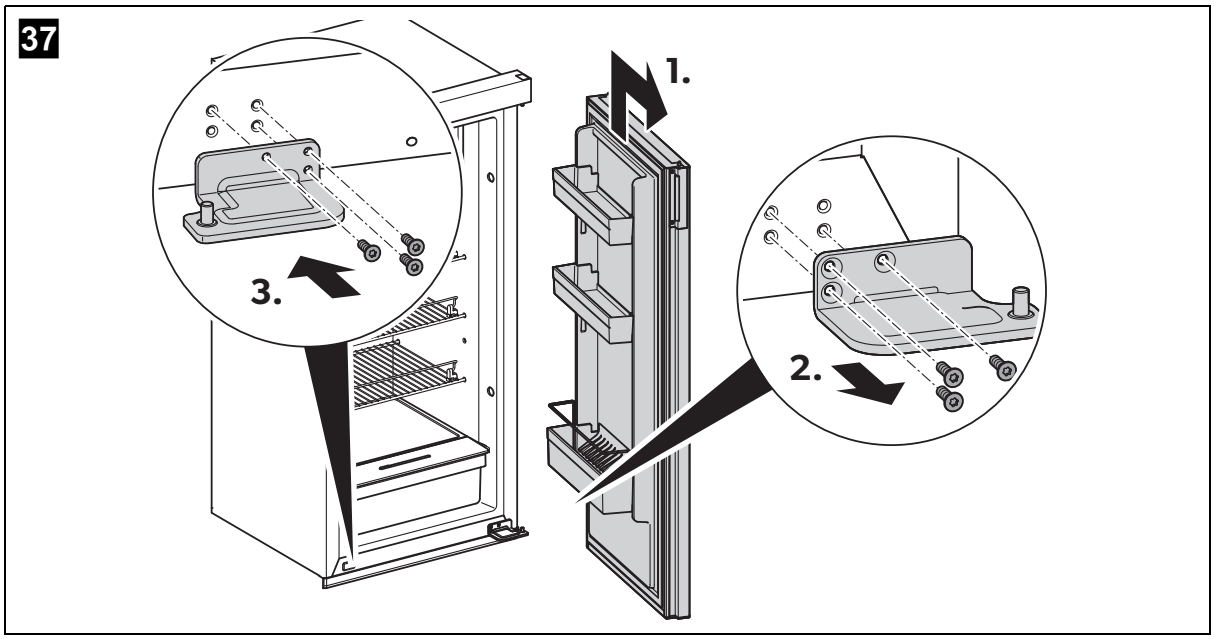

➤ Remove the refrigerator door by lifting it up until it clears the lower pin (**1.** in fig. 37).

NOTE
Carefully lift up the refrigerator door to prevent damaging the door bushing.

➤ Place the refrigerator door on soft material in order to prevent scratches.

➤ Remove the three screws from the lower hinge (**2.** in fig. **37**) and discard the old hinge.

➤ Fix the new lower hinge (not included, see chapter "Accessories" on page 7) to the new position with the three screws (**3.** in fig. **37**).

38

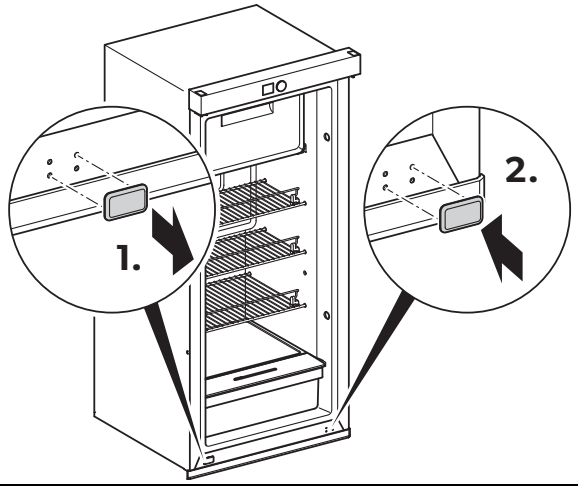

➤ Remove the cover from the lower hinge point (**1.** in fig. **38**).

➤ Install the cover on the opposite side (**2.** in fig. **38**).

39

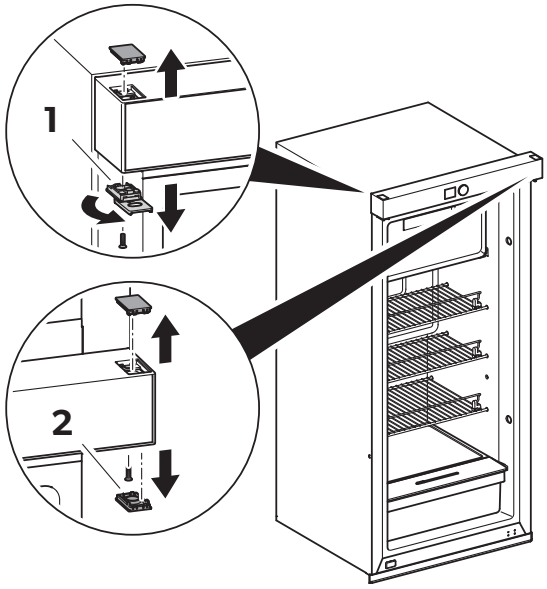

➤ Rotate the locking catch on the latch side by 180 degrees to expose the fixing screw.

➤ Remove the locking catch screw (fig. 39 1).

➤ Take off the locking catch and top cover (fig. 39 1).

➤ Remove the cover and bush on the hinge side with a small screwdriver (fig. 39 2).

➤ Remove the screw under the bush on the hinge side.

40

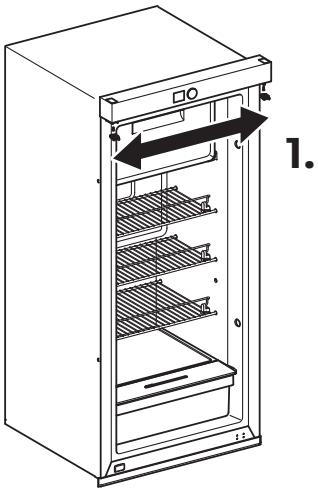

➤ Exchange the locking catch and the bush and install each of them on the opposite side.

41

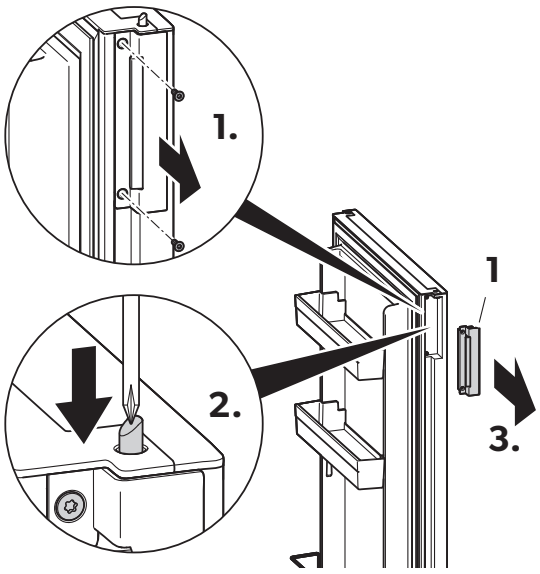

➤ Remove the two screws (**1.** in fig. 41) from the latch assembly.

➤ Push the spring bolt (**2.** in fig. 41) inwards with a small screwdriver, until the latch assembly (fig. 41 1) is released.

➤ Remove the latch assembly (**3.** in fig. 41) and discard.

➤ Remove the latch blank from the opposite side of the door.

➤ Use the latch assembly from the door reversing kit (not included, see chapter "Accessories" on page 7).

➤ Fit the new latch assembly and the original latch blank to the opposite side.

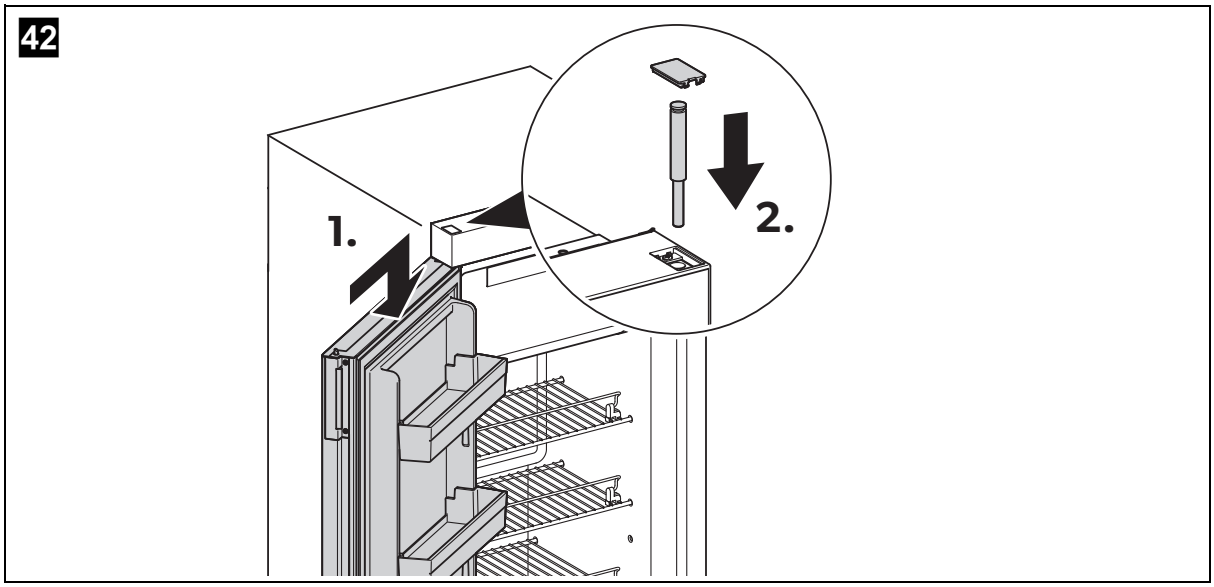

➤ Position the refrigerator door on the hinge pin of the newly mounted lower hinge (**1.** in fig. 42).

➤ Put the top pin in place (**2.** in fig. 42).

➤ Fix the top of the refrigerator door by pushing the top pin into the refrigerator door top bush.

✓ The refrigerator door is now fixed.

9.18 Reversing the doors for RUC 6408X, RUC 8408X

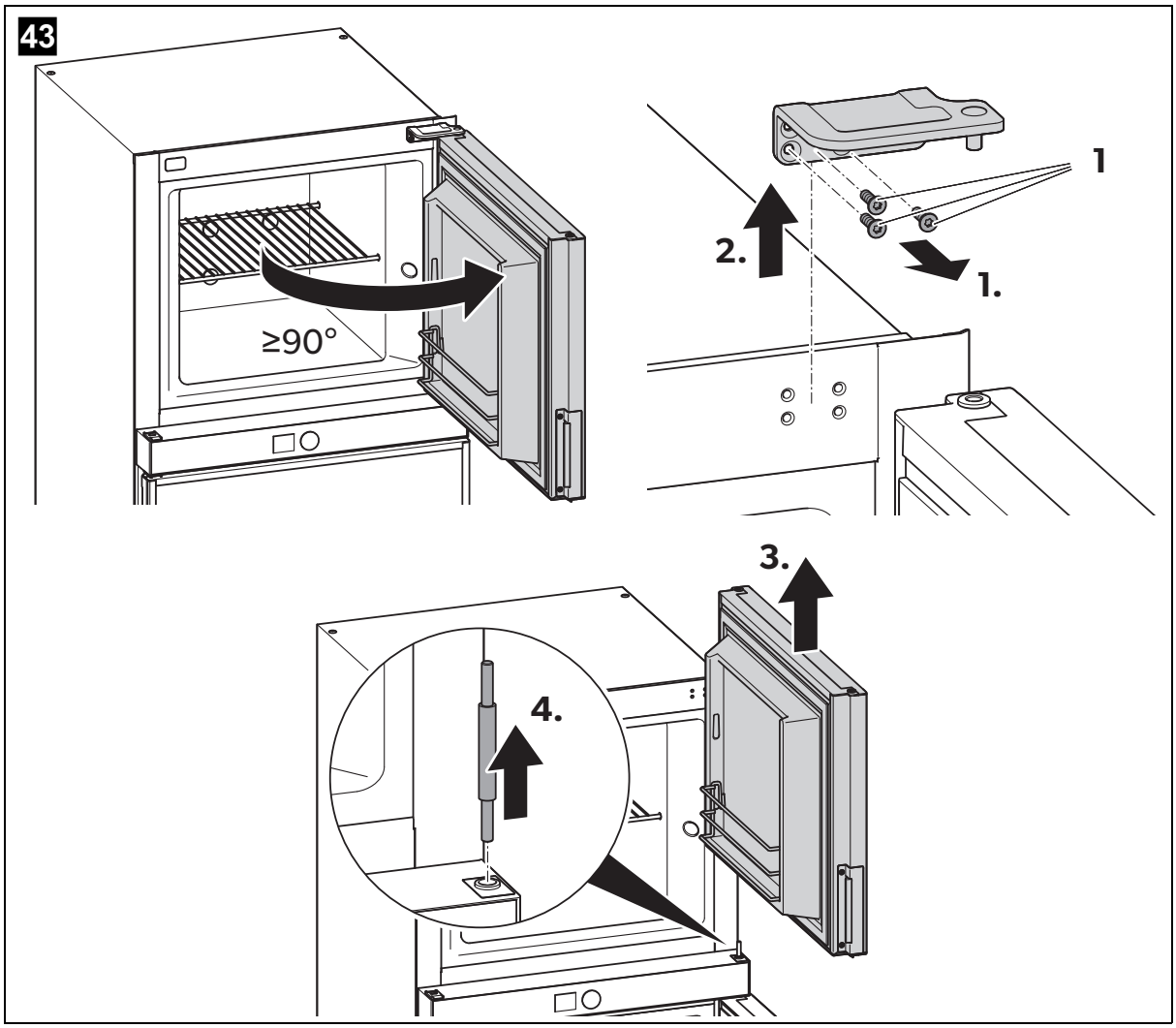

➤ Open the freezer door more than 90 degrees.

➤ Remove the three screws (fig. 43 1) from the upper hinge.

➤ Pull the upper hinge upwards out of the bushing and away from the freezer door (**2.** in fig. 43).

➤ Remove the freezer door by lifting it up until it clears the centre hinge pin (**3.** in fig. 43).

NOTE
Carefully lift up the freezer door to prevent damaging the door bushing.

➤ Place the freezer door on soft material in order to prevent scratches.

➤ Support the refrigerator door so that it does not fall off.

➤ Pull out the centre hinge pin (**4.** in fig. 43).

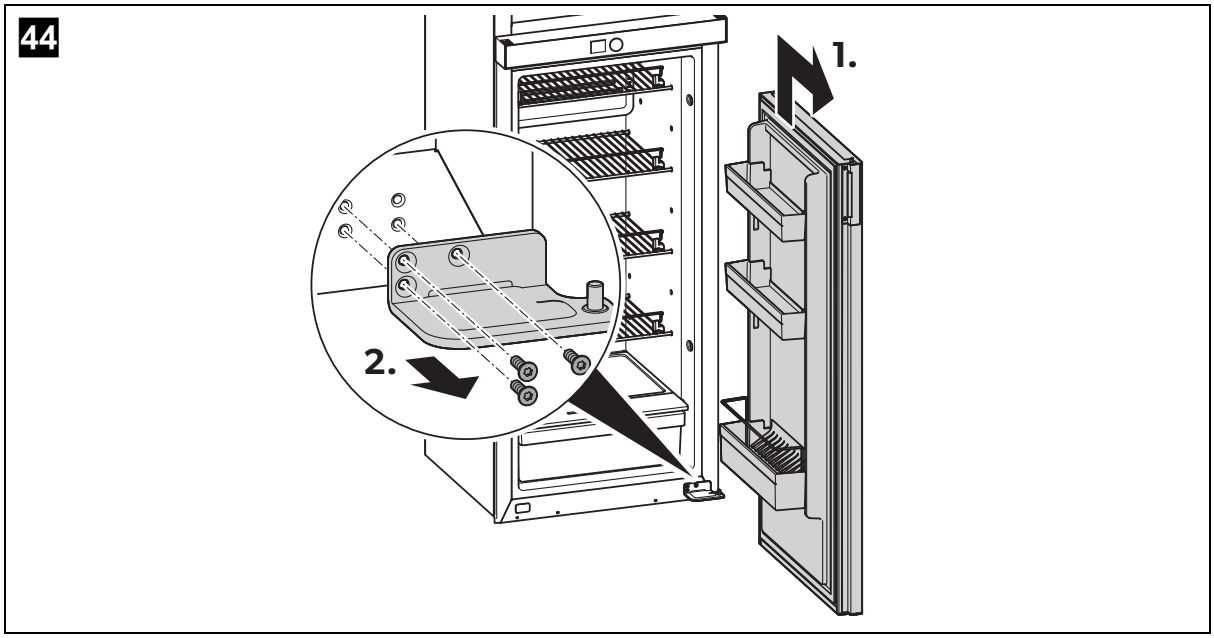

➤ Remove the refrigerator door by lifting it up until it clears the lower pin (**1.** in fig. **44**).

NOTE
Carefully lift up the refrigerator door to prevent damaging the door bushing.

➤ Place the refrigerator door on soft material in order to prevent scratches.

➤ Remove the three screws from the lower hinge (**2.** in fig. **44**).

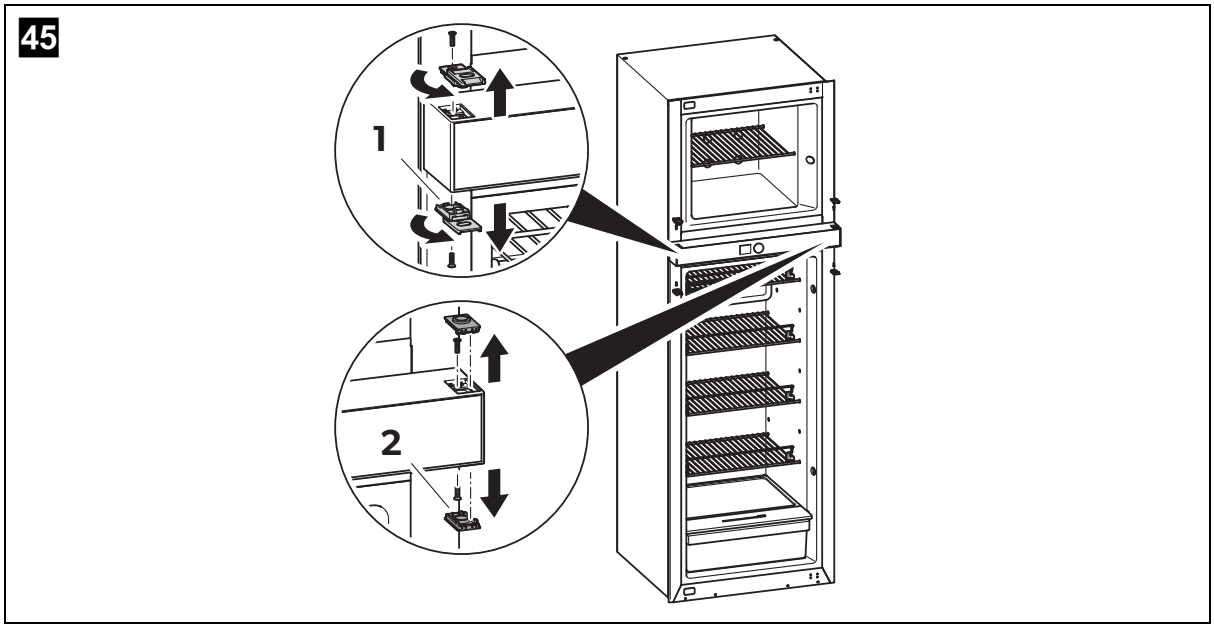

➤ Rotate the locking catches on the latch side by 180 degrees to expose the fixing screws.

➤ Remove the locking catch screws (fig. 45 1).

➤ Take off the locking catches (fig. 45 1).

➤ Remove the hinge bushes on the hinge side with a small screwdriver (fig. 45 2).

➤ Remove the screws under the hinge bushes on the hinge side.

46

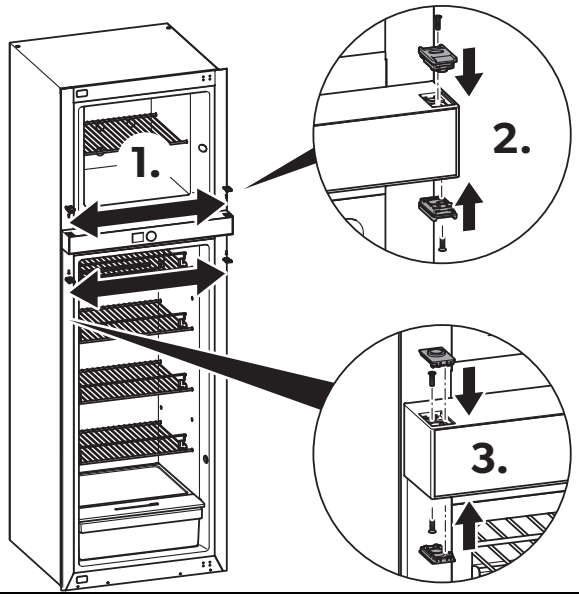

➤ Secure the screws underneath the bushes on the opposite side before the covers are installed (**3.** in fig. 46).

➤ Exchange the locking catches and the bushes and install each of them on the opposite side.

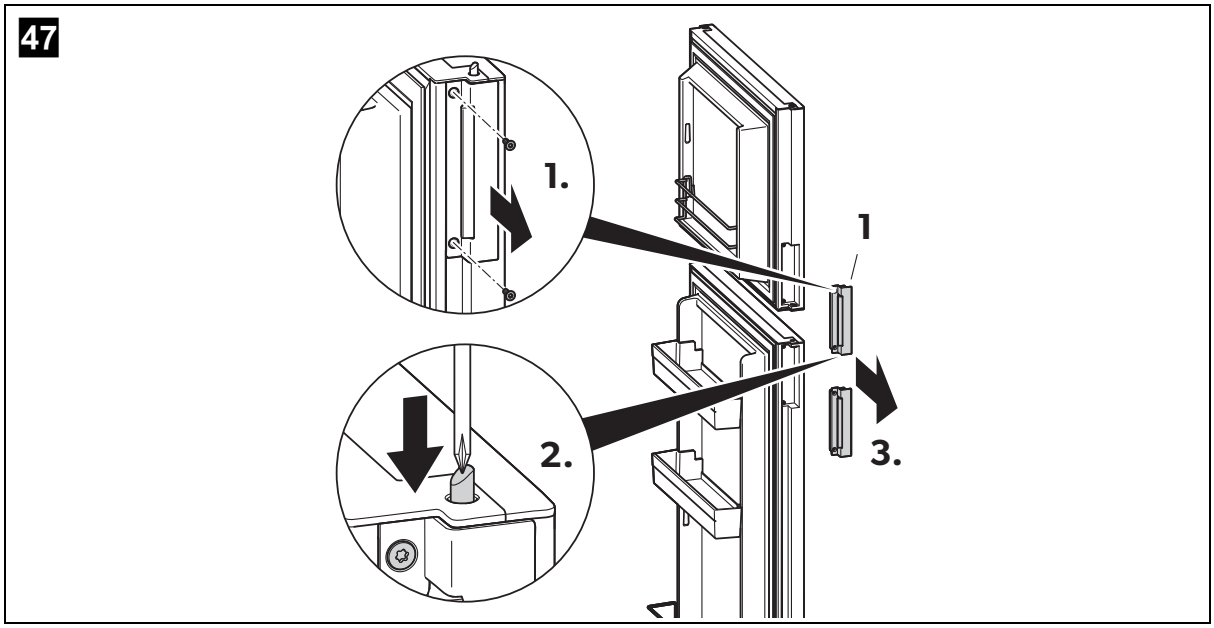

- Remove the two screws (**1.** in fig. **47**) from the latch assembly on both doors.
- Push the spring bolt (**2.** in fig. **47**) inwards with a small screwdriver, until the latch assembly (fig. **47** 1) is released.
- Remove the latch assembly (**3.** in fig. **47**) from both doors.
- Remove the latch blanks from the opposite side of both doors.
- The original freezer and refrigerator door latch assemblies swap to the opposite door due to the spring bolt function.
- Relocate the door hinge bush to the opposite side.
- Exchange the latch assemblies and latch blanks and install each of them on the opposite side.

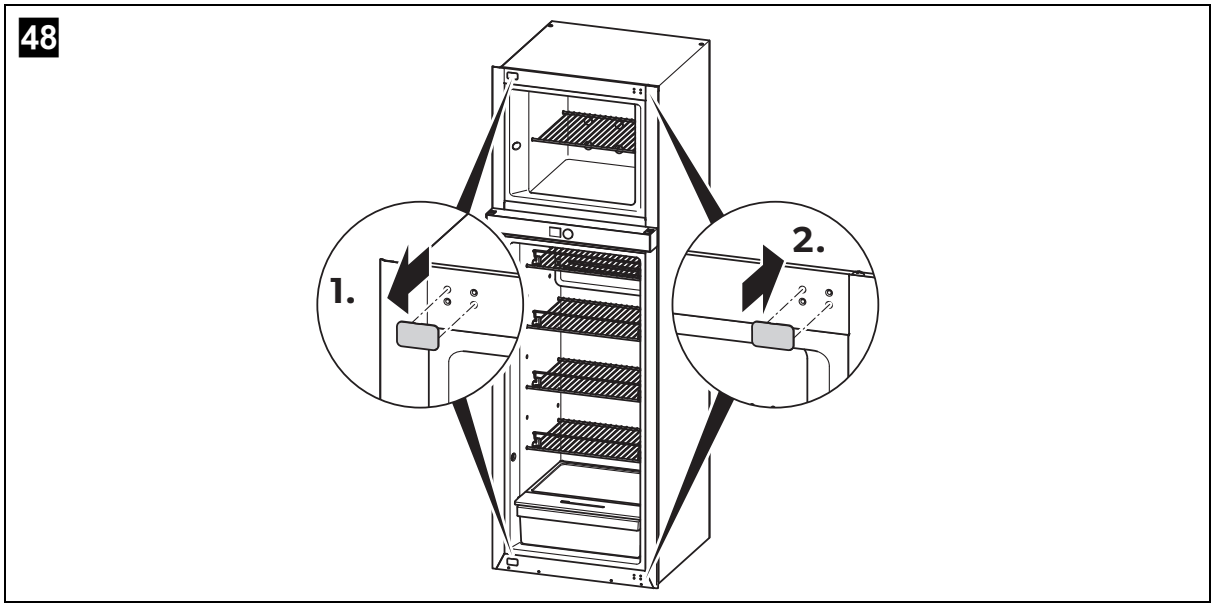

➤ Remove the covers from the upper and lower hinge points (**1.** in fig. **48**).

➤ Install the covers on the opposite side (**2.** in fig. **48**).

➤ Turn the former upper hinge 180 degrees and mount it to the new lower hinge position with the three screws.

➤ Position the refrigerator door on the hinge pin of the newly mounted lower hinge.

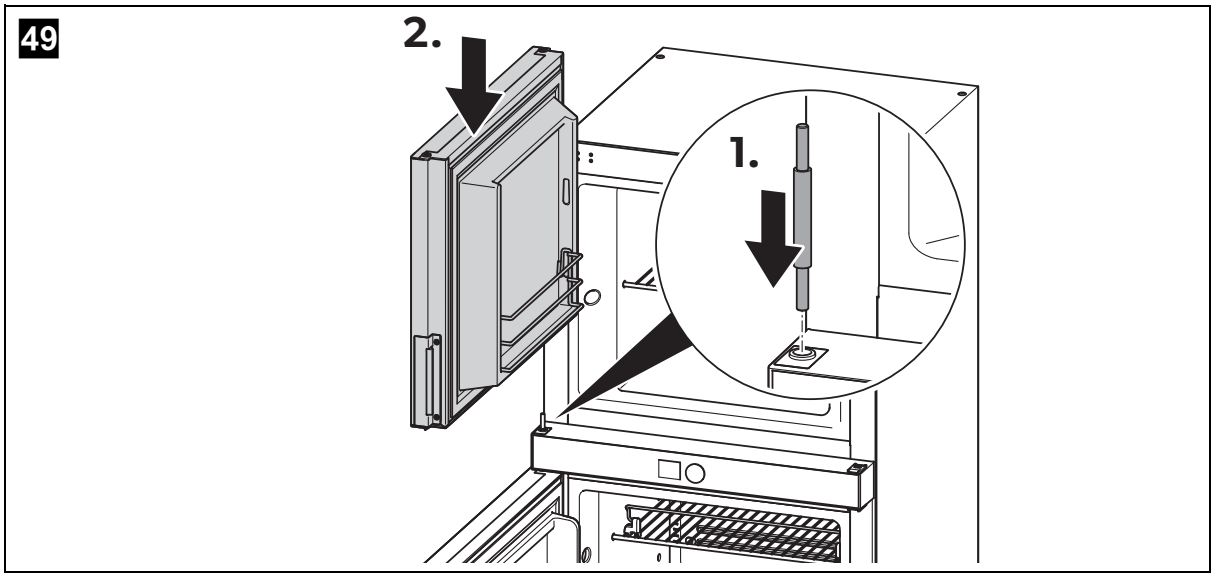

➤ Put the middle pin in place (**1.** in fig. **49**).

➤ Fix the top of the refrigerator door by pushing the middle pin into the refrigerator door top bush.

✓ The refrigerator door is now fixed.

➤ Position the freezer door on the middle pin (**2.** in fig. **49**, page 45).

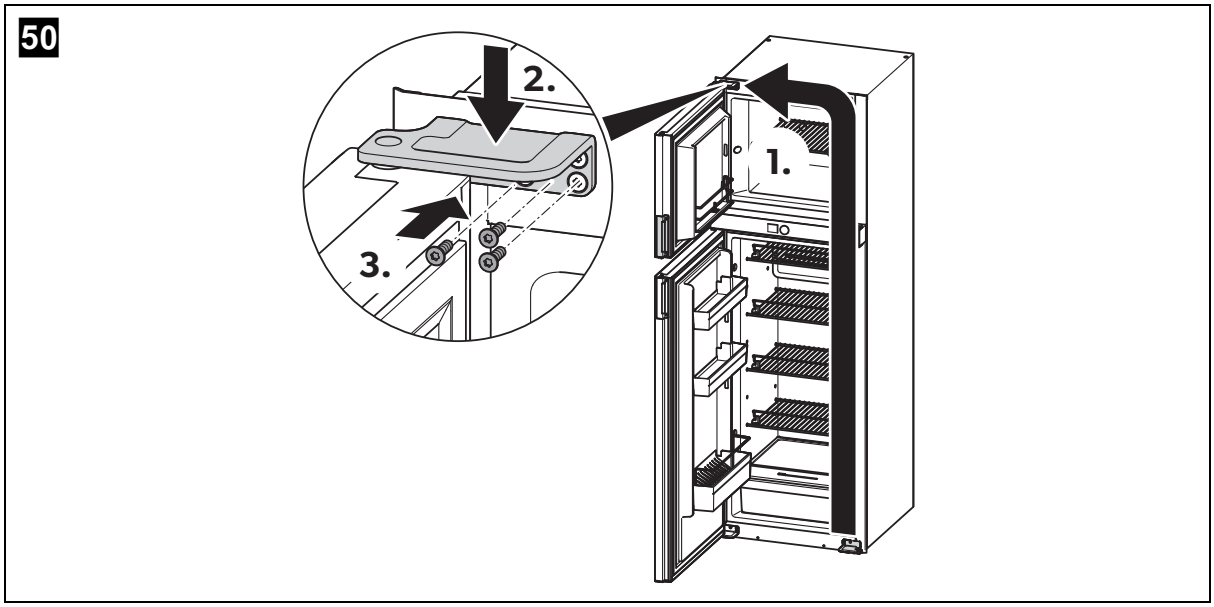

➤ Turn the former lower hinge 180 degrees and hold it in the new upper hinge position. Take care that the hinge pin fits into the upper bushing of the freezer door (**1.** and **2.** in fig. 50).

➤ Fix the hinge with the three screws (**3.** in fig. 50). To do so, open the freezer door by at least 90 degrees.

✓ The freezer door is now fixed.

10 Cleaning and maintenance

WARNING!
Always disconnect the refrigerator from the mains before you clean and service it.

NOTICE!
- Do not use abrasive cleaning agents or hard objects during cleaning as these can damage the refrigerator.
- Never use hard or sharp tools to remove ice or to free objects frozen onto the device.
- Do not use any mechanical tools or any other tools to speed up the defrosting process.

➤ Clean the refrigerator regularly and as soon as it becomes dirty with a damp cloth.

➤ Make sure that no water drips into the controls. This can damage the electronics.

➤ Wipe the refrigerator dry with a cloth after cleaning.

➤ Check the condensate drain regularly.

Clean the condensate drain when necessary. If it is blocked the condensate collects on the bottom of the refrigerator.

11 Troubleshooting

Faults and beeps

NOTE
- The beep signal can be muted once by pressing the control knob shortly or muted permanently by selecting the mute icon in the setting menu.
- If the refrigerator door is open for more than 2 minutes the beep signal will sound in combination with a flashing warning code. This signal turns off after the door is closed.

Faults are indicated on the display by highlighting the middle section with a red banner and a code. The faults that terminate the complete cooling function are displayed on the screen in combination with a beep.

In case of multiple faults, the error code will be rolling.

The beep will last for 2 minutes and repeat every 30 minutes until the fault is restored. Error type faults must be manually reset by pressing and holding the control knob between 2 s and 4 s. Warning type faults reset automatically once the condition passes.

Code	Fault	Type	Icon	Beep	Influence on cooling
01	Defrost NTC sensor error	Warning	No flashing	No	Yes, refrigerator section after some time
02	Refrigerator air NTC sensor error	Warning	No flashing	No	No
03	Communication error	Error	No flashing	Yes	No
04	CI bus error	Warning	No flashing	No	No
10	Open fridge door > 2 minutes	Warning	Flashing	Yes	No
11	DC voltage low (< 7.5 V) or high (> 31.5 V)	Warning	No flashing	No	Yes
14	Inner fan faulty	Warning	No flashing	No	Yes, refrigerator section only
17	Defrost heater, low current (< 1 A)	Warning	No flashing	No	No
18	Defrost heater, high current (> 3 A)	Error	No flashing	No	No, but the power of the heater is stopped.
19	Input voltage out of ABS setting range	Warning	No flashing	No	Yes
26	Ambient thermo-stat sensor error	Warning	No flashing	No	No
32	Outer fan over-current	Error	No flashing	Yes	Yes
33	Compressor not started	Error	No flashing	Yes	Yes

Code	Fault	Type	Icon	Beep	Influence on cooling
34	Compressor overloaded	Error	No flashing	Yes	Yes
35	Thermal cut-out of controller unit	Error	No flashing	Yes	Yes

Compressor does not run (battery connection)

Fault	Possible cause	Remedy
Device does not function, display does not glow $U_{Term} = 0$ V	The connection between the battery and electronics unit has been interrupted.	Establish a connection.
	Main switch faulty (if installed)	Replace the main switch.
	Additional supply line fuse has blown (if installed).	Replace the supply line fuse.
	Internal fuse has blown.	Replace the internal fuse.
$U_{Term} \leq U_{ON}$	Battery voltage is too low.	Charge the battery.
The device does not cool (power is present, display is lit)	Defective component	This can only be repaired by an authorised repair centre.
The device does not cool, power is present, error indicator appears Start attempt with $U_{Term} \leq U_{OFF}$	Loose cables Poor contact (corrosion)	Establish a connection.
	Battery capacity too low	Replace the battery.
	Cable cross section too small or cable too long	Replace the cable according to chapter "Connecting the refrigerator to 12 – 24 V" on page 23.
	The device has switched off due to an internal fault.	This can only be repaired by an authorised repair centre.

Fault	Possible cause	Remedy
Start attempt with $U_{Term} \geq U_{ON}$	Ambient temperature too high	–
	Insufficient ventilation	Clean existing ventilation or install sufficient ventilation.
	Condenser is dirty	Clean the condenser.
	Fan defective	Replace the fan.
Electric circuit between the pins in the compressor interrupted	Defective compressor	This can only be repaired by an authorised repair centre.

U_{Term} Voltage between the positive and negative terminals of the electronics

U_{ON} Cut-in voltage of the electronics

U_{OFF} Cut-off voltage of the electronics

Compressor is not running (connected to AC supply)

Fault	Possible cause	Remedy
Device does not function, display does not glow	Connection supply line interrupted	Establish a connection.
	Main switch faulty (if installed)	Replace the main switch.
	Additional supply line fuse has blown (if installed).	Replace the supply line fuse.
	The integrated mains adapter is defective.	This can only be repaired by an authorised repair centre
The device does not cool (power is present, display is lit)	Defective component	This can only be repaired by an authorised repair centre.
Voltage is being applied, but the compressor does not operate	Ambient temperature too high	–
	Insufficient ventilation	Clean existing ventilation or install sufficient ventilation.
	Condenser is dirty.	Clean the condenser.
	Fan defective (if installed)	Replace the fan.

Fault	Possible cause	Remedy
Electric circuit between the pins in the compressor interrupted	Defective compressor	This can only be repaired by an authorised repair centre.

Interior temperature too low on warmest control setting

Fault	Possible cause	Remedy
Compressor runs constantly	Control sensor faulty	This can only be repaired by an authorised repair centre.
Compressor runs for a long time	Large quantities of unfrozen goods have been placed in the freezer compartment.	Wait until goods are completely frozen.

Poor cooling, increase in interior temperature

Fault	Possible cause	Remedy
Compressor runs for a long time/continuously	Evaporator is iced over.	Defrost the evaporator.
	Cooling area insulation is insufficient (moist/wet).	Adjust/replace the door seal.
	Ambient temperature too high	–
	Insufficient ventilation	Upgrade to satisfy requirements in installation guideline.
	Condenser is dirty.	Clean the condenser.
	Fan defective	Replace the fan.
Compressor does not run often	Battery capacity exhausted	Charge the battery.

Water in or under the refrigerator

Fault	Possible cause	Remedy
Water is leaking into the inside of the refrigerator.	The water drain system is clogged.	Clean the drain.
	Foodstuffs are preventing the water from flowing to the drain tube.	Make sure that foodstuffs do not touch the rear wall.
Water is leaking onto the floor.	The hose is split or not routed outside the vehicle.	Check the drain hose at the rear of the device.

Unusual noises

Fault	Possible cause	Remedy
Loud humming	A component of the refrigerant circuit cannot move freely (touching the wall).	Bend the component carefully away from the obstruction.
	There is a foreign object stuck between the cooling unit and the wall.	Remove the foreign object.
	Fan noise (normal)	–

12 Warranty

The statutory warranty period applies. If the product is defective, please contact the manufacturer's branch in your country (see the back of the instruction manual for the addresses) or your retailer.

For repair and guarantee processing, please have the following information on hand:

- A copy of the receipt with purchasing date
- A reason for the claim or description of the fault

13 Disposal

WARNING! Children beware!
Before disposing of your old refrigerator:
- Dismantle the drawers.
- Leave the shelves in the refrigerator so that children cannot climb inside.

NOTICE!
An insulating gas is used in the device (see type plate). Check with the relevant local government authority or your local waste disposal company about proper disposal and make sure that the device and all materials are disposed of professionally.

➤ Place the packaging material in the appropriate recycling waste bins wherever possible.

If you wish to finally dispose of the product, ask your local recycling centre or specialist dealer for details about how to do this in accordance with the applicable disposal regulations.

14 Technical data

	RUC 5208X	**RUC 6408X**	**RUC 8408X**
Gross volume:	161 l	188 l	224 l
Fridge storage volume:	140 l	134 l	170 l
Freezer storage volume:	13 l	46 l	46 l
Connection voltage:	100 – 240 V∼, 50 – 60 Hz 12 V⎓ or 24 V⎓		
Power rating (AC):	75 W		
Rated current			
12 V⎓:	9.0 A	9.2 A	10.5 A
24 V⎓:	3.9 A	4.0 A	5.0 A
100 V∼ :	1.0 A	1.0 A	1.3 A
240 V∼ :	0.45 A	0.45 A	0.55 A

	RUC 5208X	**RUC 6408X**	**RUC 8408X**
Power consumption at ambient temperature of 32 °C, +3 °C refrigerator:	240 V~ : 0.76 kWh/24 h 12 V⎓: 2.4 Ah/h	240 V~ : 0.95 kWh/24 h 12 V⎓: 2.8 Ah/h	240 V~ : 1.02 kWh/24 h 12 V⎓: 3.0 Ah/h
Cooling temperature range Refrigerator compartment: Freezer compartment:	 0 °C to +8°C –20 °C to –10 °C		
Noise emission	≤ 35 dB		
Climatic class:	N or T(+16 °C to +43 °C)		
Short-term inclination:	30°		
Refrigerant:	R134a		
Refrigerant quantity:	51 g	68 g	73 g
Defrost Refrigerator: Freezer:	 Cyclic Manual		
Dimensions (in mm) W x H – without flange: – with flange: Depth (in mm) – overall (excludes control knob 5 mm): – from flange rear face:	 525 x 1178 550 x 1191 677 611	 525 x 1434 550 x 1447 677 611	 525 x 1644 550 x 1657 677 611
Weight:	40 kg	43 kg	46 kg
Inspection/certification:			

NOTE
The power consumption is measured at 32 °C ambient temperature with 3 °C average cooling temperature in the refrigerator compartment.

Contains fluorinated greenhouse gases

Hermetically sealed equipment

AUSTRALIA
Dometic Australia Pty. Ltd.
1 John Duncan Court · Varsity Lakes QLD 4227
☏ 1800 212121 · 🖷 +61 7 55076001
Mail: sales@dometic.com.au

dometic.com

DOMETIC

AUSTRIA
Dometic Austria GmbH
Neudorferstraße 108
A-2353 Guntramsdorf
☏ +43 2236 908070
🖷 +43 2236 90807060
Mail: info@dometic.at

BENELUX
Dometic Branch Office Belgium
Lourdesstraat 84
B-8940 Geluwe
☏ +32 2 3598040
🖷 +32 2 3598050
Mail: info@dometic.be

DENMARK
Dometic Denmark A/S
Nordensvej 15, Taulov
DK-7000 Fredericia
☏ +45 75585966
🖷 +45 75586307
Mail: info@dometic.dk

FINLAND
Dometic Finland OY
Mestarintie 4
FIN-01730 Vantaa
☏ +358 20 7413220
Mail: info@dometic.fi

FRANCE
Dometic SAS
ZA du Pré de la Dame Jeanne
B.P. 5
F-60128 Plailly
☏ +33 3 44633525
🖷 +33 3 44633518
Mail : vehiculesdeloisirs@dometic.fr

GERMANY
Dometic WAECO International GmbH
Hollefeldstraße 63 · D-48282 Emsdetten
☏ +49 (0) 2572 879-0
🖷 +49 (0) 2572 879-300
Mail: info@dometic-waeco.de

HONG KONG
Dometic Group Asia Pacific
Suites 2207-11 · 22/F · Tower 1
The Gateway · 25 Canton Road,
Tsim Sha Tsui · Kowloon
☏ +852 2 4611386
🖷 +852 2 4665553
Mail: info@waeco.com.hk

HUNGARY
Dometic Zrt. Sales Office
Kerékgyártó u. 5.
H-1147 Budapest
☏ +36 1 468 4400
🖷 +36 1 468 4401
Mail: budapest@dometic.hu

ITALY
Dometic Italy S.r.l.
Via Virgilio, 3
I-47122 Forlì (FC)
☏ +39 0543 754901
🖷 +39 0543 754983
Mail: vendite@dometic.it

JAPAN
Dometic KK
Maekawa-Shibaura, Bldg. 2
2-13-9 Shibaura Minato-ku
Tokyo 108-0023
☏ +81 3 5445 3333
🖷 +81 3 5445 3339
Mail: info@dometic.jp

MEXICO
Dometic Mx, S. de R. L. de C. V.
Circuito Médicos No. 6 Local 1
Colonia Ciudad Satélite
CP 53100 Naucalpan de Juárez
Estado de México
☏ +52 55 5374 4108
🖷 +52 55 5393 4683
Mail: info@dometic.com.mx

NETHERLANDS
Dometic Benelux B.V.
Ecustraat 3
NL-4879 NP Etten-Leur
☏ +31 76 5029000
🖷 +31 76 5029019
Mail: info@dometic.nl

NEW ZEALAND
Dometic New Zealand Ltd.
PO Box 12011
Penrose
Auckland 1642
☏ +64 9 622 1490
🖷 +64 9 622 1573
Mail: customerservices@dometic.co.nz

NORWAY
Dometic Norway AS
Østerøyveien 46
N-3232 Sandefjord
☏ +47 33428450
🖷 +47 33428459
Mail: firmapost@dometic.no

POLAND
Dometic Poland Sp. z o.o.
Ul. Puławska 435A
PL-02-801 Warszawa
☏ +48 22 414 3200
🖷 +48 22 414 3201
Mail: info@dometic.pl

PORTUGAL
Dometic Spain, S.L.
Branch Office em Portugal
Rot. de São Gonçalo nº 1 – Esc. 12
2775-399 Carcavelos
☏ +351 219 244 173
🖷 +351 219 243 206
Mail: info@dometic.pt

RUSSIA
Dometic RUS LLC
Komsomolskaya square 6-1
RU-107140 Moscow
☏ +7 495 780 79 39
🖷 +7 495 916 56 53
Mail: info@dometic.ru

SINGAPORE
Dometic Pte Ltd
18 Boon Lay Way
06–141 Trade Hub 21
Singapore 609966
☏ +65 6795 3177
🖷 +65 6862 6620
Mail: dometic@dometic.com.sg

SLOVAKIA
Dometic Slovakia s.r.o.
Sales Office Bratislava
Nádražná 34/A
900 28 Ivánka pri Dunaji
☏/🖷 +421 2 45 529 680
Mail: bratislava@dometic.com

SOUTH AFRICA
Dometic (Pty) Ltd.
Regional Office
South Africa & Sub-Saharan Africa
2 Avalon Road
West Lake View Ext 11
Modderfontein 1645
Johannesburg
☏ +27 87 3530380
Mail: info@dometic.co.za

SPAIN
Dometic Spain S.L.
Avda. Sierra del Guadarrama, 16
E-28691 Villanueva de la Cañada
Madrid
☏ +34 902 111 042
🖷 +34 900 100 245
Mail: info@dometic.es

SWEDEN
Dometic Scandinavia AB
Gustaf Melins gata 7
SE-42131 Västra Frölunda
☏ +46 31 7341100
🖷 +46 31 7341101
Mail: info@dometicgroup.se

SWITZERLAND
Dometic Switzerland AG
Riedackerstrasse 7a
CH-8153 Rümlang
☏ +41 44 8187171
🖷 +41 44 8187191
Mail: info@dometic.ch

UNITED ARAB EMIRATES
Dometic Middle East FZCO
P. O. Box 17860
S-D 6, Jebel Ali Freezone
Dubai
☏ +971 4 883 3858
🖷 +971 4 883 3868
Mail: info@dometic.ae

UNITED KINGDOM
Dometic UK Ltd.
Dometic House, The Brewery
Blandford St. Mary
Dorset DT11 9LS
☏ +44 344 626 0133
🖷 +44 344 626 0143
Mail: customerservices@dometic.co.uk

USA
Dometic RV Division
1120 North Main Street
Elkhart, IN 46515
☏ +1 574-264-2131

4445102446 12/2018