Renault MASTER

Driver's handbook

RENAULT

Downloaded from www.Manualslib.com manuals search engine

A passion for **performance**

ELF, partner of world series by RENAULT

RENAULT recommends ELF

Partners in cutting-edge automotive technology, Elf and Renault combine their expertise on both the racetrack and the city streets. This enduring partnership gives drivers a range of lubricants perfectly suited to Renault cars. Lasting protection and optimum performance for your engine – guaranteed. Whether changing the oil or simply topping up, to find the approved ELF lubricant best suited to your vehicle, ask your Renault dealer for a recommendation or consult your vehicle maintenance handbook.

www.lubricants.elf.com

A brand from TOTAL

Downloaded from www.Manualslib.com manuals search engine

Welcome to your new vehicle

This Driver's Handbook contains the information necessary:

– for you to familiarise yourself with your vehicle, to use it to its best advantage and to benefit fully from the all the functions and the technical developments it incorporates.

– to ensure that it always gives the best performance by following the simple, but comprehensive advice concerning regular maintenance.

– to enable you to deal quickly with minor faults not requiring specialist attention.

It is well worth taking a few minutes to read this handbook to familiarise yourself with the information and guidelines it contains about the vehicle and its functions and new features. If certain points are still unclear, our Network technicians will be only too pleased to provide you with any additional information.

The following symbol will help you when reading this handbook:

To indicate a hazard, danger or safety recommendation.

The descriptions of the models given in this handbook are based on the technical specifications at the time of writing. **This handbook covers all items of equipment** (both standard and optional) **available for these models but whether or not these are fitted to the vehicle depends on the version, options selected and the country where the vehicle is sold.**

This handbook may also contain information about items of equipment to be introduced later in the model year.

Throughout the manual, the "approved Dealer" is your RENAULT Dealer.

Enjoy driving your new vehicle.

Translated from French. Copying or translation, in part or in full, is forbidden unless prior written permission has been obtained from the vehicle manufacturer.

Downloaded from www.Manualslib.com manuals search engine

0.2

Downloaded from www.Manualslib.com manuals search engine

C O N T E N T S

Sections

Getting to know your vehicle 1

Driving 2

Your comfort 3

Maintenance 4

Practical advice 5

Technical specifications 6

Alphabetical index 7

Downloaded from www.Manualslib.com manuals search engine

0.4

Downloaded from www.Manualslib.com manuals search engine

Section 1: Getting to know your vehicle

Key, remote control 1.2
Hands-free access transmitter/receiver. 1.7
Locking/unlocking the doors 1.9
Doors. 1.12
Headrests 1.18
Front seats. 1.19
Steering wheel/power-assisted steering 1.22
Seat belts. 1.23
Methods of restraint in addition to the front seat belts. 1.27
Side protection devices 1.30
Child safety: General information 1.32
    choosing a child seat mounting 1.35
    fitting a child seat, general information. 1.37
Child seats: attachment by seat belt or by Isofix system. 1.38
    deactivating/activating the front passenger airbag. 1.68
Rear view mirrors 1.71
Driving position: left-hand drive 1.72
Driver’s position, right-hand drive 1.74
Warning lights 1.76
Trip computer and warning system 1.82
Clock 1.91
Exterior temperature 1.91
Windscreen washer/wiper 1.92
Exterior lighting and signals. 1.94
Electrical adjustment of the dipped beam headlights 1.98
Audible and visual signals 1.99
Fuel tank 1.100
Additive tank 1.102

Downloaded from www.Manualslib.com manuals search engine

KEY/RADIO FREQUENCY REMOTE CONTROL: general information (1/3)

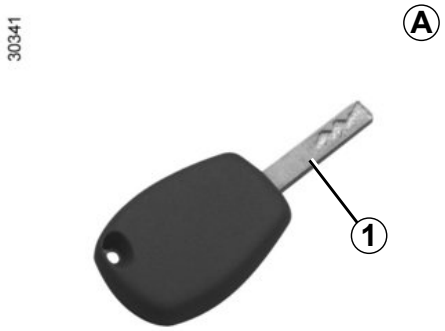

Key *A*

1 Key for ignition switch, doors and fuel filler cap.

The key must not be used for any function other than those described in the handbook (removing the cap from a bottle, etc.).

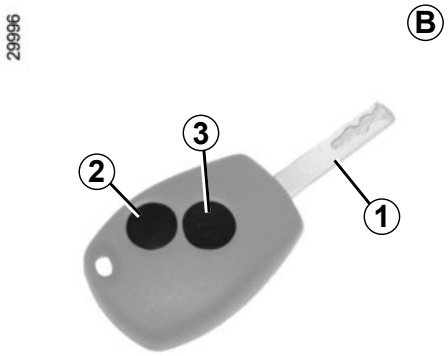

Radio frequency remote control *B*

1 Key for ignition switch, doors and fuel filler cap.
2 Locking the doors and tailgate.
3 Unlocking the doors and tailgate.

Advice

Avoid leaving the remote control in hot, cold or humid areas.

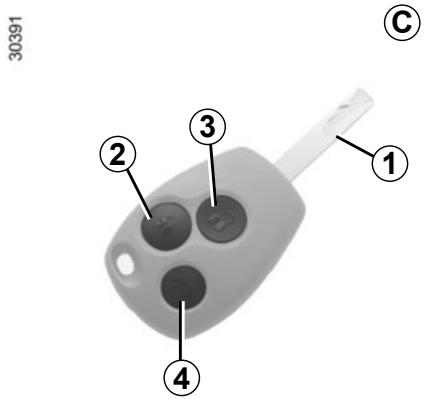

Radio frequency remote control *C*

1 Key for ignition switch, doors and fuel filler cap.
2 Locking the doors and tailgate.
3 Unlocking the front doors or, depending on the vehicle, all the doors. Refer to the information on “Key, radio frequency remote control: use” in Section 1.
4 Unlocking/locking the tailgate Depending on the vehicle, locking/unlocking the sliding side doors.

Downloaded from www.Manualslib.com manuals search engine

KEY/RADIO FREQUENCY REMOTE CONTROL: general information (2/3)

Radio frequency remote control operating range

This varies according to the environment: take care not to lock or unlock the doors by inadvertently pressing the buttons on the remote control.

Note: on certain vehicles, if a door is not opened within approximately 2 minutes of the door being unlocked by remote control, the doors will lock again automatically.

Interference

Interference by factors in the immediate vicinity (external installations or the use of equipment operating on the same frequency as the remote control) may affect the operation of the remote control.

Driver's responsibility when parking or stopping the vehicle

Never leave an animal, child or adult who is not self-sufficient alone on your vehicle, even for a short time.

They may pose a risk to themselves or to others by starting the engine, activating equipment such as the electric windows or locking the doors.

Also, in hot and/or sunny weather, please remember that the temperature inside the passenger compartment increases very quickly.

RISK OF DEATH OR SERIOUS INJURY.

Downloaded from www.Manualslib.com manuals search engine

KEY/RADIO FREQUENCY REMOTE CONTROL: general information (3/3)

31565

Hands-free access transmitter/receiver *D*

This enables the vehicle doors to be locked/unlocked without using the remote control unit. Refer to the information on “Hands-free access transmitter/receiver: use” in Section 1.

Replacement, additional remote control or transmitter/receiver

You must only contact an approved Dealer.

– To replace a remote control, the vehicle must be taken to an approved Dealer as both the vehicle and the remote control are needed to initialise the system.
– Depending on the vehicle, you may use up to four remote controls or two transmitter/receivers.

Remote control unit failure

Make sure that the correct battery type is being used, and that the battery is in good condition and inserted correctly. These batteries have a service life of approximately two years.

Refer to the information on the “Key, radio frequency remote control: batteries” in Section 5 for the battery changing procedure.

Downloaded from www.Manualslib.com manuals search engine

KEY/RADIO FREQUENCY REMOTE CONTROL: use (1/2)

Remote control ***B*** is used to lock or unlock the doors.

It is powered by a battery which must be replaced (refer to the information on the “Key/ radio frequency remote control: batteries” in Section 5).

Locking the doors

Pressing button ***1*** locks the doors and tailgate.

The side indicator lights and hazard warning lights flash **twice** to indicate that the doors have been **locked**.

Unlocking the doors

Pressing button ***2*** unlocks the doors and tailgate.

Unlocking is indicated by **one flash** of the hazard warning lights and the indicator lights.

29996

B

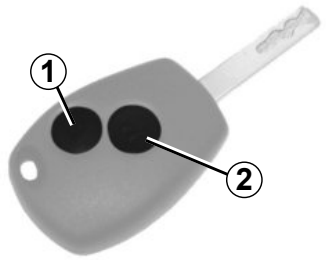

Note: depending on the vehicle, when a door or the tailgate is left open or not properly closed, all the doors and the tailgate lock/unlock quickly without the hazard warning lights flashing.

To lock/unlock the doors from inside, refer to the information on “Central door locking/unlocking” in Section 1.

Driver’s responsibility when parking or stopping the vehicle

Never leave an animal, child or adult who is not self-sufficient alone on your vehicle, even for a short time.

They may pose a risk to themselves or to others by starting the engine, activating equipment such as the electric windows or locking the doors.

Also, in hot and/or sunny weather, please remember that the temperature inside the passenger compartment increases very quickly.

RISK OF DEATH OR SERIOUS INJURY.

Downloaded from www.Manualslib.com manuals search engine

KEY/RADIO FREQUENCY REMOTE CONTROL: use (2/2)

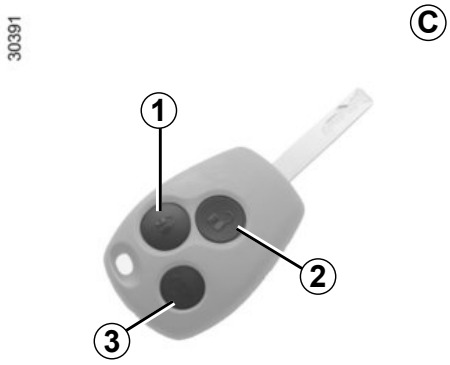

Remote control ***C*** is used to lock or unlock the doors and tailgate.
It is powered by a battery which must be replaced (refer to the information on the “Key/radio frequency remote control: batteries” in Section 5).

The key must not be used for any function other than those described in the handbook (removing the cap from a bottle, etc.).

Unlocking the doors

Briefly pressing button ***2*** unlocks the front doors or, depending on the vehicle, all the doors.

Depending on the vehicle, briefly pressing button ***2*** twice in succession unlocks all the doors.

Briefly pressing button ***3*** locks and unlocks the tailgate and, depending on the vehicle, the sliding side doors.

Unlocking is indicated by **one flash** of the hazard warning lights and the indi- - cator lights.

Locking the doors

Briefly pressing button ***1*** locks all the doors.

Pressing button ***1*** locks/unlocks the tailgate and, depending on the vehicle, the sliding side doors.

The indicator lights and hazard warning lights **flash twice** to indicate that the doors have locked.

Deadlocking the doors

If fitted to the vehicle, this allows the doors to be locked and prevents them from being opened with the interior handles (for example, by breaking the window and then trying to open the doors from the inside).

To activate deadlocking

Press button ***1*** twice in quick succession.

The hazard warning lights and indicator lights flash **five** times to indicate that the doors have locked.

Never use deadlocking if someone is still inside the vehicle.

Downloaded from www.Manualslib.com manuals search engine

HANDS-FREE ACCESS TRANSMITTER/RECEIVER: use (1/2)

31565

For vehicles equipped with transmitter/receiver ***1***, in addition to the functions of the remote control, it can be used to lock/unlock without using the remote control locking unit when it is in access zone **2**.

Note: the hands-free access transmitter/receiver only works with the front doors and the tailgate.

30420

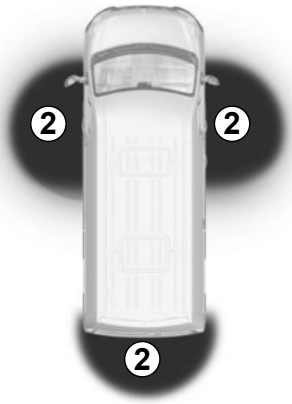

It is powered by a battery which must be replaced (refer to the information on the “Hands-free access transmitter/receiver: batteries” in Section 5).

Driver’s responsibility when parking or stopping the vehicle

Never leave an animal, child or adult who is not self-sufficient alone on your vehicle, even for a short time.

They may pose a risk to themselves or to others by starting the engine, activating equipment such as the electric windows or locking the doors.

Also, in hot and/or sunny weather, please remember that the temperature inside the passenger compartment increases very quickly.

RISK OF DEATH OR SERIOUS INJURY.

Downloaded from www.Manualslib.com manuals search engine

HANDS-FREE ACCESS TRANSMITTER/RECEIVER: use (2/2)

Interference

Interference by factors in the immediate vicinity (external installations or the use of equipment operating on the same frequency as the remote control) may affect the operation of the remote control.

Unlocking the vehicle

With the transmitter/receiver in one of the access zones ***2***, press button ***3*** or ***4***, and all the doors will unlock.

The hazard warning lights **flash once** to indicate that the doors have been unlocked.

Locking the vehicle

With the transmitter/receiver in one of the access zones ***2***, press button ***3*** or ***4***, and all the doors will lock.

The hazard warning lights **flash once for 4 seconds** to indicate the doors have been locked.

Note: when a door or the tailgate is left open or is not properly closed, all the doors and the tailgate lock/unlock quickly without the hazard warning lights flashing.

Downloaded from www.Manualslib.com manuals search engine

CENTRAL DOOR LOCKING/UNLOCKING

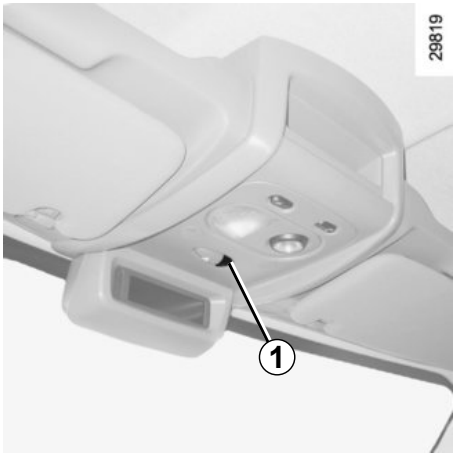

Interior locking/unlocking door control

This enables all the doors to be locked simultaneously.
Lock or unlock the doors by pressing switch ***1***.

If a door or the tailgate is open or not closed properly, the doors and tailgate lock/unlock quickly.

Locking the opening elements without the remote control

With the engine off, the rear doors closed and a front door open, press switch ***1*** for more than five seconds.
Make sure you have your key with you before you leave your vehicle.
When the door is closed, all the doors and tailgate will be locked.
Unlocking the driver's door from outside the vehicle is only possible with the key or the remote control.

Doors and tailgate status indicator light

When the ignition is on, the indicator light integrated in switch ***1*** informs you of the status of the doors and tailgate:
– indicator light on, the doors and tailgate are locked;
– light off, the doors and tailgate are unlocked.

When the ignition is off, the indicator light remains lit and then goes out when you lock the doors.

Locking the doors with the tailgate open

To lock the vehicle leaving a door open (e.g. when transporting something in the luggage compartment which prevents it from being closed), or when the vehicle is located in a zone of high electromagnetic radiation, or if the key is faulty: with the engine switched off, press and hold switch ***1*** for more than five seconds.

Never leave your vehicle with the key, remote control or transmitter/receiver inside.

Driver's responsibility

If you decide to keep the doors locked when you are driving, remember that it may be more difficult for those assisting you to gain access to the passenger compartment in the event of an emergency.

Downloaded from www.Manualslib.com manuals search engine

MANUAL DOOR LOCKING/UNLOCKING

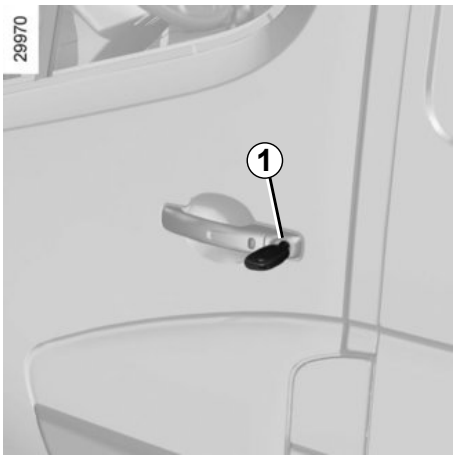

Manual control

Using the key
Lock or unlock the doors equipped with locks by inserting the key fully into lock ***1***, then turning it.

Locking the doors manually

With the door open, turn screw ***2*** (using the end of the key) or press button ***3*** and close the door. This means that the doors are then locked from the outside. The doors may then only be opened from inside the vehicle or with the key for the front doors.

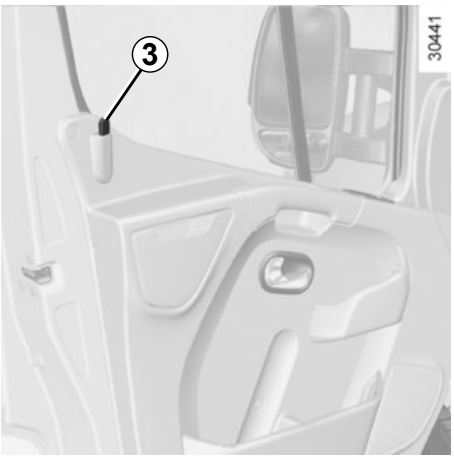

Downloaded from www.Manualslib.com manuals search engine

RAID (AUTOMATIC LOCKING WHEN DRIVING)

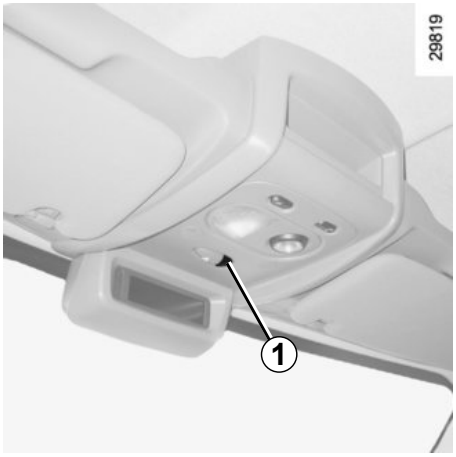

You can decide whether you want to activate this function.

To activate

With the ignition on, press switch ***1*** for approximately 5 seconds until you hear a beep.

The indicator light built into the switch comes on when the doors are locked.

To deactivate

With the ignition on, press and hold switch ***1*** for approximately 5 seconds, until you hear a beep. The indicator light in the switch goes out.

Operating principle

When the engine is started, the system automatically locks the doors when the vehicle reaches a speed of approximately 4 mph (7 km/h).

Operating faults

If you notice an operating fault (automatic locking impossible), first check that all doors are correctly locked. If they are correctly locked and the fault is still present, contact an approved Dealer.

Also make sure that locking has not been inadvertently deactivated.

If it has, switch the ignition off and on again and reactivate it.

Driver's responsibility

If you decide to keep the doors locked when you are driving, remember that it may be more difficult for those assisting you to gain access to the passenger compartment in the event of an emergency.

Downloaded from www.Manualslib.com manuals search engine

FRONT DOORS (1/2)

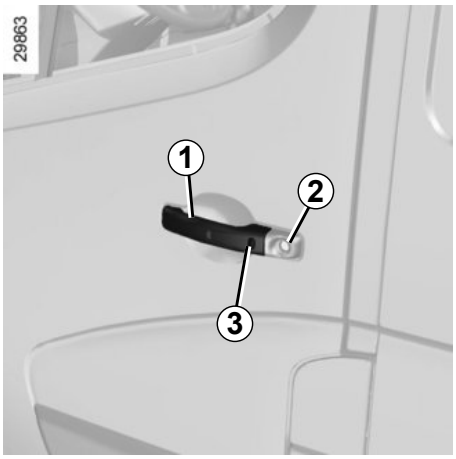

Opening the doors from the outside

Unlock a door equipped with lock ***2*** using the key.

Vehicles with a remote control
Pull handle ***1***.

Vehicles with a transmitter/receiver
Press button ***3*** and pull handle ***1***.

Closing from the outside

Push the door. Use the key in lock ***2*** to lock it, or use the remote control or the hands-free access transmitter/receiver by pressing button ***3***.

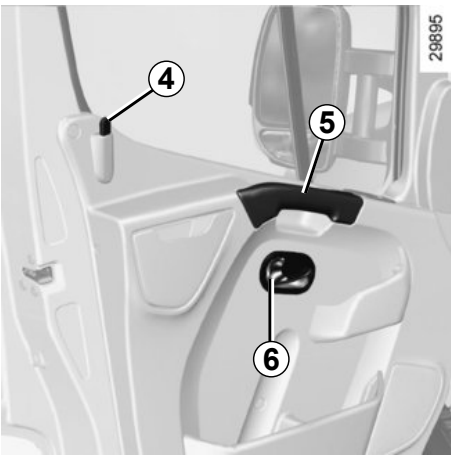

Opening from the inside

Pull handle ***6*** and open the door.

Closing from the inside

Pull the door using only handle ***5***.

As a safety precaution, the doors should only be opened or closed when the vehicle is stationary.

Downloaded from www.Manualslib.com manuals search engine

FRONT DOORS (2/2)

Manual locking

With the door closed, lock the door by pressing button ***4***.

NOTE

The front door mechanism cannot be locked if the door is open.

Lights-on reminder buzzer

If you have switched off the ignition and left the lights switched on, a reminder buzzer will sound when a door is opened.

Driver's responsibility when parking or stopping the vehicle

Never leave an animal, child or adult who is not self-sufficient alone on your vehicle, even for a short time.

They may pose a risk to themselves or to others by starting the engine, activating equipment such as the electric windows or by locking the doors.

Also, in hot and/or sunny weather, please remember that the temperature inside the passenger compartment increases very quickly.

RISK OF DEATH OR SERIOUS INJURY.

Downloaded from www.Manualslib.com manuals search engine

SLIDING SIDE DOOR (1/2)

Opening the doors from the outside

Unlock the lock with the key or with the remote control, if the vehicle is equipped with this function.
Pull handle ***1*** towards you and slide the door towards the rear.
Note: the transmitter/receiver does not work on the sliding side door (no button on the handle).

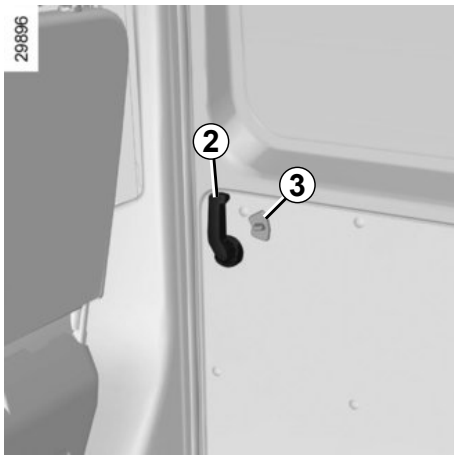

Opening from the inside

Pull lever ***2*** towards the rear and open the sliding door until it locks into position.

Closing from the outside

Pull handle ***1*** and slide the door towards the front of the vehicle until it closes completely. Lock with the key or using the remote control.

Closing from the inside

Pull lever ***2*** towards the front and close the door until it latches.

Manual locking from inside

Lower button ***3***.

As a safety precaution, the doors should only be opened or closed when the vehicle is stationary.

Downloaded from www.Manualslib.com manuals search engine

SLIDING SIDE DOOR (2/2)

30467

Child locks

With the door open, turn lever ***4*** and close the door.

This means that the door is then locked from the inside.

The door can only be opened from the outside of the vehicle.

Recommendations concerning the sliding side door.

Care must be taken when opening or closing the sliding door, as is the case for any of the opening elements on the vehicle:

- Check that the door will not come into contact with any person, part of the body, animal or object.
- Only use the handles on the inside and outside of the door to operate it.
- Take care when opening and closing the door.
- Take particular care when the vehicle is parked on a slope: open or close the door fully until it latches into its locking position.
- Before moving off, always ensure that the sliding door is properly closed.

Downloaded from www.Manualslib.com manuals search engine

REAR DOORS (1/2)

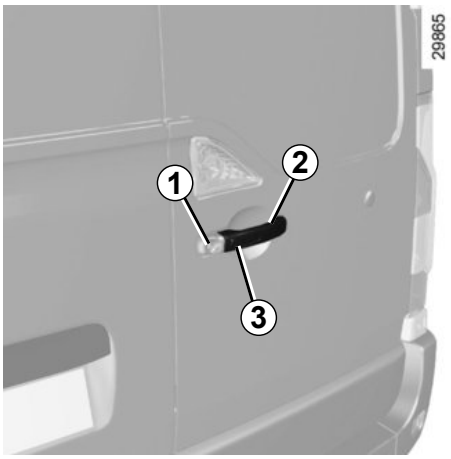

Opening the doors from the outside

Unlock lock ***1*** using the key or, on equipped vehicles, use the remote control or the hands-free access remote control by pressing button ***3***. Pull handle ***2*** towards you and open the door.

Do not leave the hinged rear doors open in case of strong winds. Risk of injury.

Lower lever ***4*** to open the door.

If the vehicle is parked on the hard shoulder with tailgate open, the rear lights may be obscured. You should make other road users aware of your vehicle by using a warning triangle or other equipment specified by the road traffic regulations of the country you are driving in.

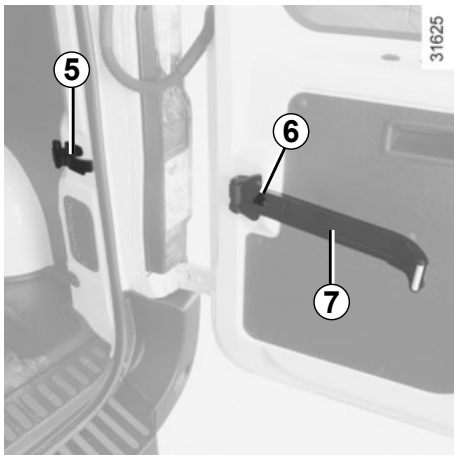

Opening the doors to 180°

Open the door, but not fully.
Remove tie rod ***7*** from its housing ***5***.
Lock the tie rod on the hook ***6***.
Open the door as far as possible.

For your safety, check that all the vehicle's doors are properly closed before starting the engine.

Downloaded from www.Manualslib.com manuals search engine

REAR DOORS (2/2)

Opening the doors to 270°

Remove the check-strap from its housing as when opening to 180°. Open the door fully until the magnets ***6*** make contact.

Closing from the outside

Partially close the left-hand door, then slam it shut.

Then repeat this with the right-hand door.

Lock.

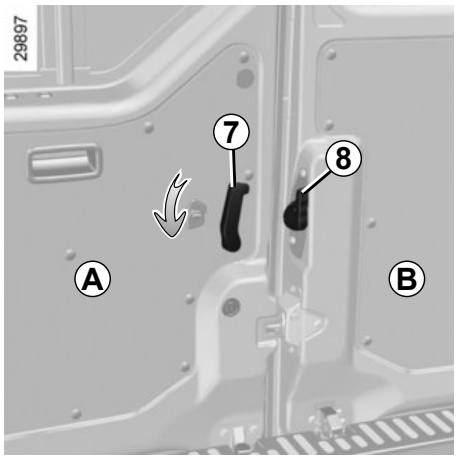

Opening from the inside

Lower lever ***7*** and push door ***A***.

Pull lever ***8*** and open door ***B***.

For your safety, check that all the vehicle's doors are properly closed before starting the engine.

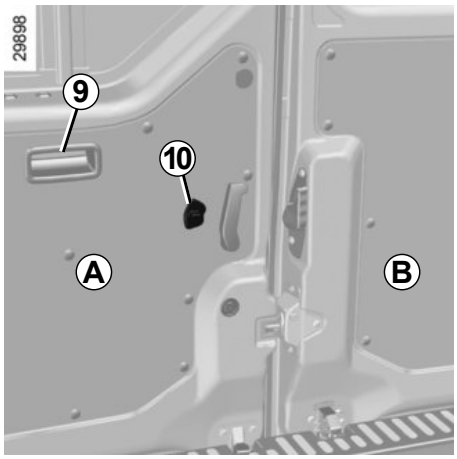

Closing from the inside

Partially close door ***B***, then slam it shut.

Do the same with door ***A*** using handle ***9***.

Locking/unlocking

Turn button ***10***.

Downloaded from www.Manualslib.com manuals search engine

HEADRESTS

To raise the headrest

Simply slide it up.

To lower the headrest

Press tab ***1*** and lower it at the same time.

To remove the headrest

Raise the headrest then press tabs ***1*** and ***2*** to release it.

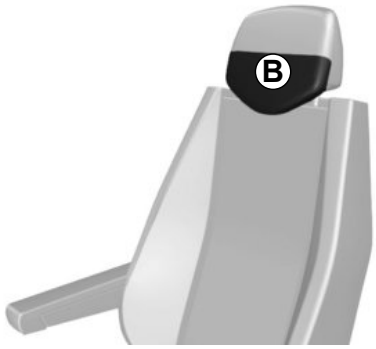

To refit the headrest

Insert the rods into the holes, with the notches to the front, and lower the headrest to the desired height by pressing tab ***1***.

Adjusting the angle of the headrest

(depending on the vehicle)

Move section ***B*** towards or away from you to the required position.

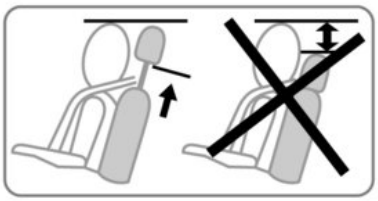

The headrest is an important safety component: ensure that it is in place and in the correct position. The distance between your head and the headrest and the distance between the head and section ***A*** should be as small as possible.

Downloaded from www.Manualslib.com manuals search engine

FRONT SEATS (1/3)

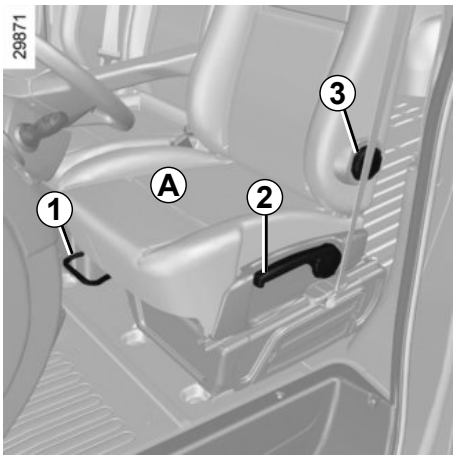

Adjusting seat *A*

To move forwards or backwards

Lift handle ***1*** to release. Release the handle once the seat is in the correct position and ensure that the seat is locked.

To adjust the height of the seat base

Lower or pull lever ***2*** as many times as is necessary to raise or lower the seat base.

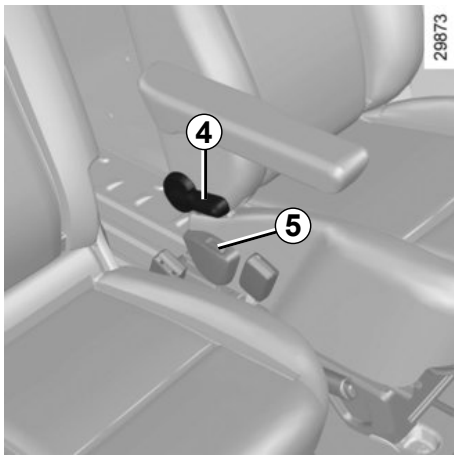

Lumbar adjustment
(depending on the vehicle)

Turn control knob ***3*** to increase or decrease support.

To tilt the seatback

Move lever ***4***.

Heated seats
(depending on the vehicle)

With the ignition on, press switch ***5***. The integrated indicator comes on.

The system, which has a thermostat, decides whether or not the heating is needed.

For safety reasons, carry out any adjustments when the vehicle is not being driven.

We would advise you not to recline the seatbacks too far to ensure that the effectiveness of the seat belts is not reduced.

Nothing should be placed on the floor (area in front of driver) as such objects may slide under the pedal during braking manoeuvres, thus obstructing its use.

Downloaded from www.Manualslib.com manuals search engine

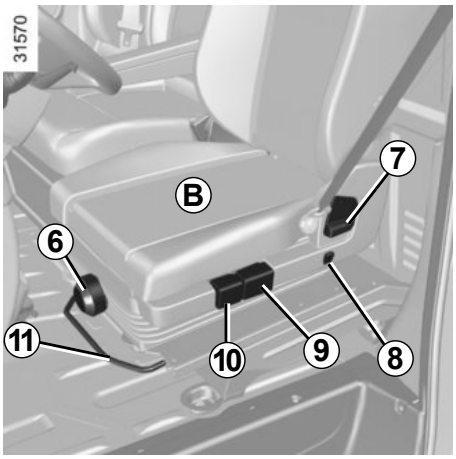

Adjusting seat *B* with suspension

To move forwards or backwards
Lift handle ***11*** to release. Release the handle once the seat is in the correct position and ensure that the seat is locked.

To tilt the seatback
Lower or pull control ***7*** towards you.

To adjust the height of the seat base
Move control ***9*** to adjust the rear of the seat base or control ***10*** to adjust the front of the seat base.

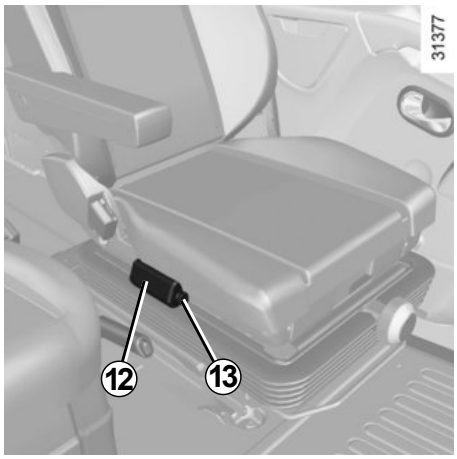

Lumbar adjustment

Activate bulb ***12*** to make it firmer.

Press switch ***13*** to make it less firm.

To adjust the seat suspension

Turn control knob ***6*** to the right to stiffen the suspension and to the left to reduce it.

Heated seats
(depending on the vehicle)

With the ignition on, press switch ***8***. The integrated indicator comes on.

The system, which has a thermostat, decides whether or not the heating is needed.

Downloaded from www.Manualslib.com manuals search engine

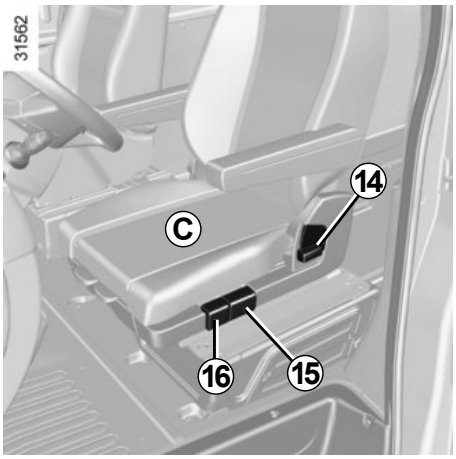

Adjusting pivoting seats *C*

To move the seat forwards or back
Move handle ***15*** to unlock it. Release the handle once the seat is in the correct position and ensure that the seat is locked.

To move the seat forwards or back
Lift handle ***18*** to move the seat base forwards or back.

To tilt the seatback
Lower or pull handle ***14*** towards you.

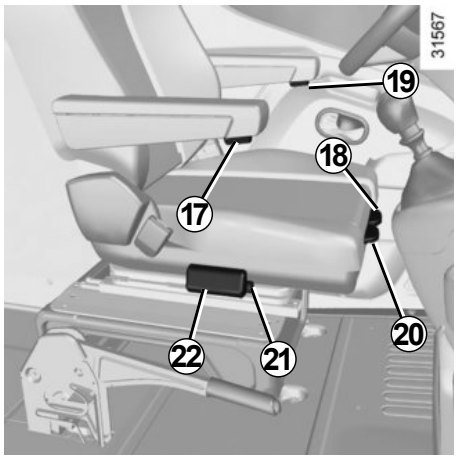

Adjusting the angle of the seat base
Move handle ***16*** to adjust the angle of the seat base.

Adjusting the height of the armrests
Turn control knob ***17*** or ***19***.

Lumbar adjustment

Activate bulb ***22*** to make it firmer.

Press switch ***21*** to make it less firm.

To pivot the seats

- Detach the seat belt buckle from its unit;
- raise the armrests;
- move the seat as far back as possible;
- adjust the seat base to its lowest position;
- adjust the seatback to the vertical position;
- open the door;
- lift handle ***20*** and pivot the seat to unlock it from its “forward-facing” position, then release handle ***20***.

Returning to the driving position

- Pivot the seat to the “forward facing” position;
- make sure the seat is correctly locked in position;
- adjust the seat to your driving position.

The “rear facing” seat position should only be used when the vehicle is stationary and the engine not running.

Downloaded from www.Manualslib.com manuals search engine

SEAT BELTS (1/3)

Always wear your seat belt when travelling in your vehicle. You must also comply with the legislation of the particular country you are in.

Seat belts which are incorrectly adjusted or twisted may cause injuries in the event of an accident.

Use one seat belt per person, whether child or adult.

Even pregnant women should wear a seat belt. In this case, ensure that the lap belt is not exerting too much pressure on the abdomen, but do not allow any slack.

Before starting, first adjust your driving position, then ask all occupants to adjust their seat belts to ensure optimum protection.

Adjusting your driving position

- **Sit well back in your seat** (having removed your coat or jacket etc.). This is essential to ensure your back is positioned correctly;
- **adjust the distance between the seat and the pedals.** Your seat should be as far back as possible while still allowing you to fully depress the clutch pedal. The seatback should be adjusted so that your arms are slightly bent when you hold the steering wheel;
- **adjust the position of your headrest.** For maximum safety, your head must be as close as possible to the headrest;
- **adjust the height of the seat.** This adjustment allows you to select the seat position which offers you the best possible view.
- **adjust the position of the steering wheel.**

Adjusting the seat belts

Sit with your back firmly against the seatback.

Shoulder strap ***1*** should be as close as possible to the base of the neck but not on it.

Lap belt ***2*** should be worn flat over the thighs and against the pelvis.

The belt should be worn so that it is as close as possible to your body, i.e.: avoid wearing heavy clothing or keeping bulky objects under the belts, etc.

Downloaded from www.Manualslib.com manuals search engine

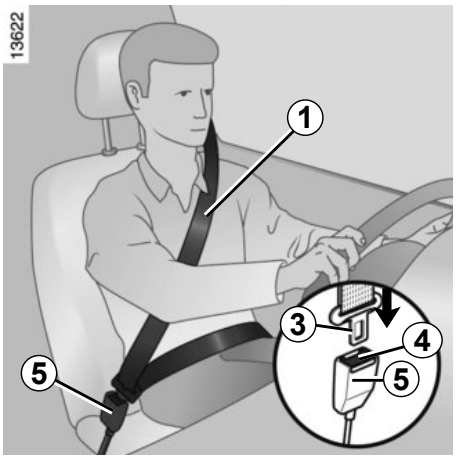

Locking

Unwind the belt **slowly and smoothly** and ensure that buckle ***3*** locks into catch ***5*** (check that it is locked by pulling on buckle ***3***).

If the belt jams, allow it to return slightly before attempting to unwind it again.

If your seat belt is completely jammed, pull slowly, but firmly so that just over 3 cm unwinds. Allow it to return slightly before attempting to unwind it again.

If there is still a problem, contact an approved dealer.

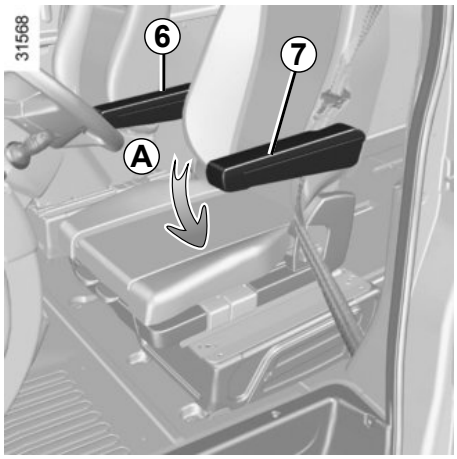

Seat with armrest(s)

Ensure the seat belt is passed underneath armrest ***6***, check that buckle ***3*** is fastened in catch ***5***.

Lower armrest ***7*** on the door side (movement ***A***).
Unwind the belt **slowly and smoothly**.
Pass the lap belt under armrest ***7*** and the shoulder strap over armrest ***7***.
Make sure the buckle locks into the catch (check that it is locked by pulling on the buckle).

Front seat belt reminder warning light

This remains lit when the engine is started, then when the seat belt is not fastened and the vehicle reaches a speed of approximately 10 mph (16 km/h), it flashes and a bleep sounds for approximately 90 seconds.

Unfastening

Press button ***4*** and the seat belt will be rewound by the inertia reel. Guide the belt.

Downloaded from www.Manualslib.com manuals search engine

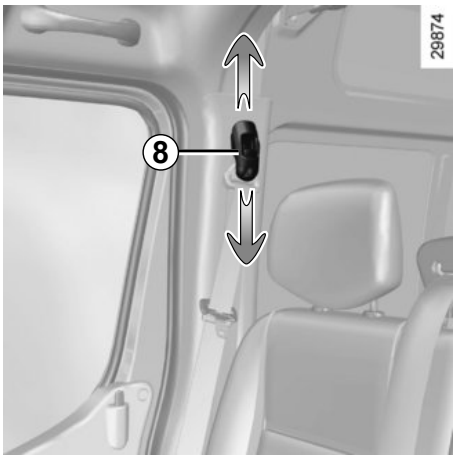

Adjusting the height of the front seat belts

Press button ***8*** to adjust the seat belt height so that the shoulder strap ***1*** is worn as shown previously;

Press button ***8*** and raise or lower the seat belt.

Make sure that the seat belt is locked in position correctly after you have adjusted it.

– No modification may be made to the component parts of the originally fitted restraint system: belts, seats and their mountings. For special operations (e.g. fitting child seats), contact an authorised dealer.

– Do not use devices which allow any slack in the belts (e.g. clothes pegs, clips, etc.): a seat belt which is worn too loosely may cause injury in the event of an accident.

– Never wear the shoulder strap under your arm or behind your back.

– Never use the same belt for more than one person and never hold a baby or child on your lap with your seat belt around them.

– The belt should never be twisted.

– Following an accident, have the seat belts checked and replaced if necessary. Always replace your seat belts as soon as they show any signs of wear.

– Make sure that the buckle is inserted into the appropriate catch.

– Ensure that no objects are placed in the area around the seat belt catch as they could prevent it from being properly secured.

– Make sure the seat belt catch is properly positioned (it should not be hidden away, crushed or flattened by people or objects).

Downloaded from www.Manualslib.com manuals search engine

REAR SEAT BELTS

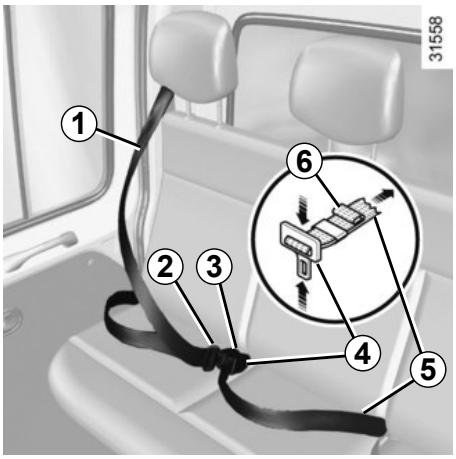

Rear seat belts with inertia reel *1*

Locking

Unwind the belt **slowly and smoothly** and ensure that buckle ***2*** locks into catch ***3*** (check that it is locked by pulling on buckle ***2***).

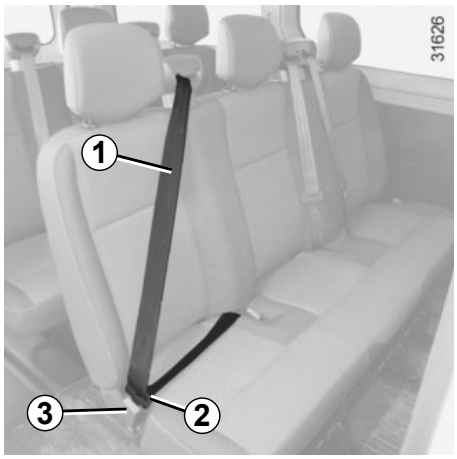

Unfastening

Press the button on catch ***3*** and the seat belt will be rewound by the inertia reel. Guide the belt.

Check that the rear seat belts are positioned and operating correctly each time the rear seats are moved.

Lap belts with manual adjustment *5*

The strap should be worn flat over your thighs and against your pelvis.
The belt should be worn so that it is as close as possible to your body, i.e. avoid wearing heavy clothing or keeping bulky objects under the belts, etc.
To tighten, pull on free section ***6*** of the belt.
To slacken, turn adjusting buckle ***4*** so it is at 90 degrees to the belt and press the buckle while pulling lap belt ***5***.

Seat belts which are incorrectly adjusted or twisted may cause injuries in the event of an accident.

Use one seat belt per person, whether child or adult.

Even pregnant women should wear a seat belt. In this case, ensure that the lap belt is not exerting too much pressure on the abdomen, but do not allow any slack.

Downloaded from www.Manualslib.com manuals search engine

METHODS OF RESTRAINT IN ADDITION TO THE FRONT SEAT BELTS (1/3)

Depending on the vehicle, they are composed of:

- **seat belt pretensioners;**
- **chest-level load limiters;**
- **air bags for driver and front passenger.**

These systems are designed to act independently or together when the vehicle is subjected to a frontal impact.

Depending on the severity of the impact, the system can trigger:

- seat belt locking;
- the seat belt seat belt pretensioner to hold the occupant in the seat, and the force limiter;
- the front air bag.

The passenger air bag protects the front passenger(s) (depending on whether there is a conventional seat or a bench seat in the front).

Pretensioners

With the ignition switched on, if the vehicle is subject to a significant frontal impact the system may, depending on the severity of the impact, trigger a piston which instantly retracts the belt.
The pretensioners hold the seat belt against the body, holding the occupant more securely against the seat, thus increasing the seat belt's efficiency.

Load limiter

Above a certain level of impact force, this mechanism is used to limit the force of the belt against the body so that it is at an acceptable level.

- Have the entire restraint system checked following an accident.
- No operation whatsoever is permitted on any part of the system (pretensioners, air bags, computers, wiring) and the system components must not be reused on any other vehicle, even if identical.
- To avoid incorrect triggering of the system which may cause injury, only qualified personnel from an approved dealer may work on the pretensioner and air bag system.
- The electric trigger system may only be tested by a specially trained technician using special equipment.
- When the vehicle is scrapped, contact an approved dealer for disposal of the pretensioner and air bag gas generators.

Downloaded from www.Manualslib.com manuals search engine

METHODS OF RESTRAINT IN ADDITION TO THE FRONT SEAT BELTS (2/3)

Air bags for driver and front passenger

It is fitted to the front seats on the driver's side and, depending on the vehicle, on the passenger's side as well.

Depending on the vehicle, an "air bag" marking on the steering wheel and the dashboard (air bag area ***A***) indicates that this device is fitted.

Each air bag system consists of:

– an air bag and gas generator fitted on the steering wheel for the driver and in the dashboard for the front passenger;

– an electronic unit for system monitoring which controls the gas generator electrical trigger system;

– a special tell-tale light;

– remote sensors.

Operation

This system is only operational when the ignition is switched on.

If a severe **frontal** impact occurs, the air bag(s) inflate rapidly, thus cushioning the impact of the driver's head and chest on the steering wheel and those of the passenger on the dashboard; the air bag(s) then deflate immediately after the impact to prevent the occupants from being impeded in any way when leaving the vehicle.

The air bag system uses pyrotechnic principles. This explains why, when the air bag inflates, it will generate heat, produce smoke (this does not mean that a fire is about to start) and make a noise upon detonation. In a situation where an air bag is required, it will inflate immediately and this may cause some minor, superficial grazing to the skin or other problems.

Downloaded from www.Manualslib.com manuals search engine

METHODS OF RESTRAINT IN ADDITION TO THE FRONT SEAT BELTS (3/3)

All of the warnings below are given so that the air bag is not obstructed in any way when it is deployed and also to prevent the risk of serious injuries caused by items which may be dislodged when the air bag deploys.

Warnings concerning the driver's air bag

– Do not modify the steering wheel or the steering wheel boss.

– Do not cover the steering wheel boss under any circumstances.

– Do not attach any objects (badge, logo, clock, telephone holder, etc.) to the steering wheel boss.

– The steering wheel must not be removed (except by qualified personnel from our Network).

– When driving, do not sit too close to the steering wheel. Sit with your arms slightly bent (see the information on "Adjusting your driving position" in Section 1). This will allow sufficient space for the air bag to deploy correctly and be fully effective.

Warnings concerning the passenger air bag

– Do not attach or glue any objects (badge, logo, clock, telephone holder, etc.) to the dashboard on or near the air bag.

– Do not place anything between the dashboard and the passenger (pet, umbrella, walking stick, parcels, etc.).

– The passenger must not put his or her feet on the dashboard or seat as there is a risk that serious injuries may occur. In general, parts of the body should be kept away from the dashboard (knees, hands, head, etc.).

– The devices in addition to the front passenger seat belt should be reactivated as soon as a child seat is removed, to ensure the protection of the passenger in the event of an impact.

A CHILD SEAT MUST NOT BE FITTED TO THE FRONT PASSENGER SEAT UNLESS THE ADDITIONAL RESTRAINT SYSTEMS, I.E. THE PASSENGER AIR BAG, ARE DEACTIVATED.

(refer to the information on "Child safety: deactivating/activating the front passenger air bag" in Section 1)

Downloaded from www.Manualslib.com manuals search engine

SIDE PROTECTION DEVICES

Side air bags

These air bags may be fitted to the front seats and are deployed at the sides of the seats (door side) to protect the occupants in the event of a severe side impact.

These air bags operate through slits in the front seatbacks (door side): never insert any objects in these slits.

Warnings concerning the side air bag

– **Fitting seat covers:** seats equipped with an air bag require covers specifically designed for your vehicle. Contact an approved Dealer to find out if these covers are available. The use of any covers other than those designed for your vehicle (and including those designed for another vehicle) may affect the operation of the air bags and reduce your protection.

– Do not place any accessories, objects or even pets between the seatback, the door and the internal fittings. Do not cover the seatback with any items such as clothes or accessories. This may prevent the air bag from operating correctly or cause injury when the air bag is deployed.

– No work or modification whatsoever may be carried out on the seat or internal fittings, except by qualified personnel from an approved Dealer.

Downloaded from www.Manualslib.com manuals search engine

ADDITIONAL METHODS OF RESTRAINT

All of the warnings below are given so that the air bag is not obstructed in any way when it is inflated and also to prevent the risk of serious injuries caused by items which may be dislodged when the air bag inflates.

The air bag is designed to complement the action of the seat belt. Both the air bags and seat belts are integral parts of the same protection system. It is therefore essential to wear seat belts at all times. If seat belts are not worn, the occupants are exposed to the risk of serious injury in the event of an accident. It may also increase the risk of minor superficial injuries occurring when the air bag is deployed, although such minor injuries are always possible with air bags.

If the vehicle should overturn or suffer a rear impact, however severe, the pre-tensioners and air bags are not always triggered. Shocks to the underbody of the vehicle, e.g. from pavements, potholes or stones, can all trigger these systems.

– No work or modification **whatsoever** may be carried out on any part of the air bag system (air bags, pretensioners, computer, wiring harness, etc.), except by qualified personnel from an approved dealer.

– To ensure that the system is in good working order and to avoid accidental trig-gering of the system which may cause injury, only qualified Network personnel may work on the air bag system.

– As a safety precaution, have the air bag system checked if your vehicle has been involved in an accident, or is stolen or broken into.

– When selling or lending the vehicle, inform the user of these points and hand over this driver's handbook with the vehicle.

– When scrapping your vehicle, contact your approved dealer for disposal of the gas generator(s).

Operating faults

Indicator light ***1***, , lights up when the ignition is switched on and goes out after a few seconds.

If it does not light up when the ignition is switched on, or comes on when the engine is running, there is a fault in the system.

Contact your approved dealer as soon as possible. Your protection will be re-duced until this fault is rectified.

Downloaded from www.Manualslib.com manuals search engine

CHILD SAFETY: General information (1/2)

Carrying children

Children, and adults, must be correctly seated and strapped in for all journeys. The children being carried in your vehicle are your responsibility.

A child is not a miniature adult. Children are at risk of specific injuries as their muscles and bones have not yet finished growing. The seat belt alone would not provide suitable protection. Use an approved child seat and ensure you use it correctly.

To prevent the doors being opened, use the childproof locks (please refer to the information on “Locking/unlocking the doors” in Section 1).

A collision at 30 mph (50 km/h) is the same as falling a distance of 10 metres. Transporting a child without a restraint is the equivalent of allowing him or her to play on a fourth-floor balcony without railings.
Never travel with a child held in your arms. In the event of an accident, you will not be able to keep hold of the child, even if you yourself are wearing a seat belt.
If your vehicle has been involved in a road accident, replace the child seat and have the seat belts checked.

Driver’s responsibility when parking or stopping the vehicle

Never leave an animal, child or adult who is not self-sufficient alone on your vehicle, even for a short time.

They may pose a risk to themselves or to others by starting the engine, activating equipment such as the electric windows or by locking the doors.

Also, in hot and/or sunny weather, please remember that the temperature inside the passenger compartment increases very quickly.

RISK OF DEATH OR SERIOUS INJURY.

Downloaded from www.Manualslib.com manuals search engine

CHILD SAFETY: General information (2/2)

Using a child seat

The level of protection offered by the child seat depends on its ability to restrain your child and on its installation. Incorrect installation compromises the protection it offers the child in the event of harsh braking or an impact.

Before purchasing a child seat, check that it complies with the regulations for the country you are in and that it can be fitted in your vehicle. Consult an approved dealer to find out which seats are recommended for your vehicle.

Before fitting a child seat, read the manual and respect its instructions. If you experience any difficulties during installation, contact the manufacturer of the equipment. Keep the instructions with the seat.

Set a good example by always fastening your seat belt and teaching your child:
- to strap themselves in correctly.
- to always get in and out of the car at the kerb, away from busy traffic.

Do not use a second-hand child seat or one without an instruction manual.

Check that there are no objects in the vicinity of the child seat which could impede its operation.

Never leave a child unattended in the vehicle.

Check that your child is always strapped in and that the belt or safety harness used is correctly set and adjusted. Avoid wearing bulky clothing which could cause the belts to slacken.

Never let your child put their head or arms out of the window.

Check that the child is in the correct position for the entire journey, especially if asleep.

Downloaded from www.Manualslib.com manuals search engine

CHILD SAFETY: choosing a child seat

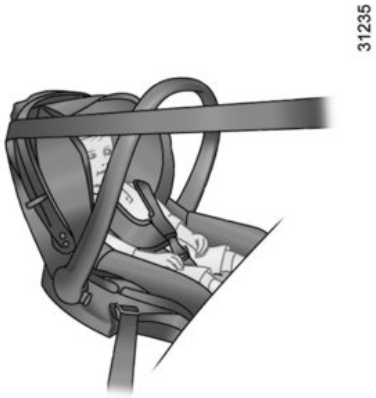

Rear-facing child seats
A baby's head is, proportionally, heavier than that of an adult and its neck is very fragile. Transport the child in this position for as long as possible (until the age of 2 at the very least). It supports both the head and the neck.
Choose a bucket type seat for best side protection and change it as soon as the child's head is higher than the shell.

Forward-facing child seats
The child's head and abdomen need to be protected as a priority. A forward-facing child seat which is firmly attached to the vehicle will reduce the risk of impact to the head. Ensure your child travels in a forward-facing seat with a harness for as long as their size permits.
Choose a bucket type seat for optimum side protection.

Booster cushions
From 15 kg or 4 years, the child can travel using a booster seat, which will enable the seat belt to be adapted to suit his/her size and shape. The booster seat cushion must be fitted with guides to position the seat belt on the child's thighs rather than the stomach. It is recommended that you use a seat-back fitted with a belt strap guide which can be adjusted in terms of height to position the seat belt in the centre of the shoulder. It must never rest on the neck or on the arm.
Choose a bucket type seat for optimum side protection.

Downloaded from www.Manualslib.com manuals search engine

CHILD SAFETY: choosing a child/baby seat mounting (1/2)

There are two ways of attaching child seats: via the seat belt or using the ISOFIX system.

Attachment via the seat belt

The seat belt must be adjusted to ensure that it is effective in the event of harsh braking or an impact.

Ensure that the strap paths indicated by the child seat manufacturer are respected.

Always check that the seat belt is correctly fastened by pulling it up, then pulling it out fully whilst pressing on the child seat.

Check that the seat is correctly held by moving it from side to side and back to front: the seat should remain firmly fixed.

Check that the child seat has not been installed at an angle and that it is not resting against a window.

Do not use the child seat if it may unfasten the seat belt restraining it: the base of the seat must not rest on the buckle and/or catch of the seat belt.

The seat belt must never be twisted or the tension relieved. Never pass the shoulder strap under the arm or behind the back.
Check that the seat belt has not been damaged by sharp edges.
If the seat belt does not operate normally, it will not protect the child. Consult an approved dealer. Do not use this seat until the seat belt has been repaired.

No modifications may be made to the component parts of the restraint system (ISOFIX seat belts, seats and their mountings) originally fitted.

Attachment using the ISOFIX system

Authorised ISOFIX child seats are approved in accordance with regulation ECE-R44 in one of the three following scenarios:
– ISOFIX universal 3-point forwardfacing seat
– ISOFIX semi-universal 2-point seat
– specific

For the latter two, check that your child seat can be installed by consulting the list of compatible vehicles.

Attach the child seat with the ISOFIX locks, if these are provided. The ISOFIX system allows quick, easy, safe fitting. The ISOFIX system consists of 2 rings and, in some cases, a third ring.

Before using an ISOFIX child seat that you purchased for another vehicle, check that its installation is authorised. Consult the list of vehicles which can be fitted with the seat from the equipment manufacturer.

Downloaded from www.Manualslib.com manuals search engine

CHILD SAFETY: choosing a child/baby seat mounting (2/2)

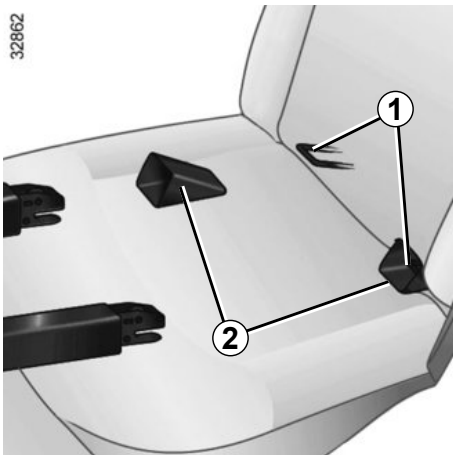

The two rings ***1*** are located between the seatback and the seat base of the seat and are identified by a marking.

To ensure your child seat can be easily fitted and locked on rings ***1***, use access guides ***2*** on the child seat.

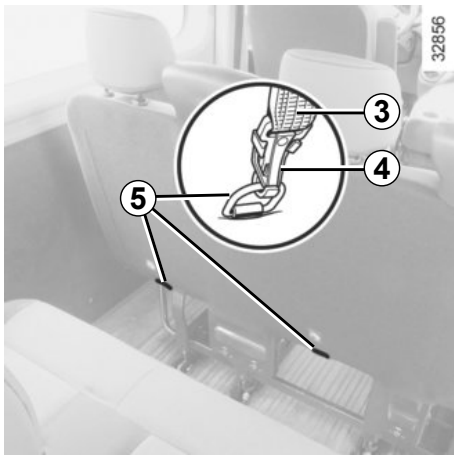

The third ring is used to attach the upper strap on some child seats.

– Place the headrest in the top position or remove it;

– pass belt ***3*** (supplied with the seat) between the two rear headrest rods;

– attach the hook ***4*** to ring ***5*** (**essential**) located in the luggage compartment;

– tighten the belt.

The ISOFIX anchorage points have been exclusively designed for child seats with the ISOFIX system. Never fit a different type of child seat, seat belt or other objects to these anchorage points.

Check that nothing is obstructing the anchorage points.

If your vehicle has been involved in a road accident, have the ISOFIX anchorage points checked and replace your child seat.

Downloaded from www.Manualslib.com manuals search engine

CHILD SAFETY: fitting a child seat: general information (1/2)

Some seats are not suitable for fitting child seats. The diagrams on the following pages show you how to attach a child seat.

The types of child seats indicated may not be available. Before using a different child seat, check with the manufacturer that it can be fitted.

Fit the child seat in a rear seat wherever possible.

Check that when installing the child seat in the vehicle it is not at risk of coming loose from its base.

If you have to remove the headrest, check that it is correctly stored so that it does not come loose under harsh braking or impact.

Always attach the child seat to the vehicle even if it is not in use so that it does not come loose under harsh braking or impact.

Front seats

The laws concerning children travelling in the front passenger seat differ in every country. Consult the legislation in force and follow the indications on the diagrams on the following pages.

Before fitting a child seat in this seat (if authorised):
- lower the seat belt as far as possible;
- on equipped vehicles, push the seat back as far as possible;
- on equipped vehicles, tilt the seatback slightly (approximately 25°);
- on equipped vehicles, raise the seat base as far as possible.

Do not change these settings after the child seat is installed.

RISK OF DEATH OR SERIOUS INJURY: before installing a child seat on the front passenger seat, check that the air bag has been deactivated (refer to "Child safety: front passenger air bag deactivation/activation" Section 1).

Downloaded from www.Manualslib.com manuals search engine

CHILD SAFETY: fitting a child seat, general information (2/2)

In the rear seat

A carrycot can be installed across the vehicle and will take up at least two seats. Position the child with his or her feet nearest the door.

Move the front seat as far forward as possible to install a rear-facing child seat, then move back the seat in front as far as it will go, although without allowing it to come into contact with the child seat.

For the safety of the child in the forward-facing seat, do not move the seat in front back past the middle of the runner, do not tilt the seatback too far (maximum of 25°) and raise the seat as much as possible.

Check that the forward-facing child seat is resting against the back of the vehicle seat and that the headrest of the vehicle is not obstructing its use.

A child seat with a floor support must never be installed on the rear centre seat.

RISK OF DEATH OR SERIOUS INJURY.

Downloaded from www.Manualslib.com manuals search engine

CHILD SEATS: attachment by seat belt (1/18)

Two-seat van version

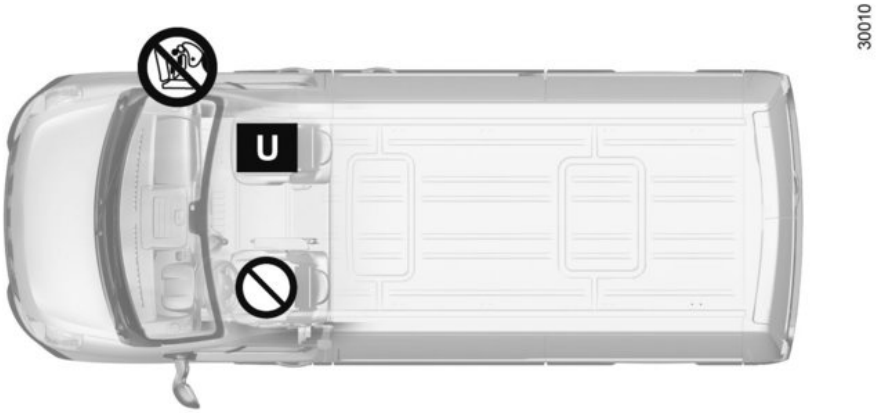

Check the status of the air bag before fitting a child seat or allowing a passenger to use the seat.

Seat not suitable for fitting child seats.

Child seat attached using the belt

U Seat which allows a child seat with “Universal” approval to be attached by a seat belt.

Using a child safety system which is not approved for this vehicle will not correctly protect the baby or child. They risk serious or even fatal injury.

RISK OF DEATH OR SERIOUS INJURY: before installing a child seat on the front passenger seat, check that the air bag has been deactivated (refer to "Child safety: front passenger air bag deactivation/activation" Section 1).

Downloaded from www.Manualslib.com manuals search engine

CHILD SEATS: attachment by seat belt (2/18)

The table below summarises the information already shown on the diagram on the previous page, to ensure the regulations in force are respected.

Two-seat van version		WITH PASSENGER AIR BAG	WITHOUT PASSENGER AIR BAG
Child seat group	**Weight of the child**	**Front passenger seat**	**Front passenger seat**
Rear-facing shell seat Group 0 or 0 +	< 13 kg	U (1)	U
Rear-facing seat Group 0+ and 1	< 13 kg and 9 to 18 kg	U (1)	U
Forward-facing seat Group 1	9 to 18 kg	U (1)	U
Booster seat Group 2 and 3	15 kg to 25 kg and 22 to 36 kg	U (1)	U

U = Seat allowing a child seat with “Universal” approval to be attached by seat belt; check that it can be fitted.

(1) RISK OF DEATH OR SERIOUS INJURY: before installing a child seat on the front passenger seat, check that the air bag has been deactivated (refer to "Child safety: front passenger air bag deactivation/activation" Section 1).

Downloaded from www.Manualslib.com manuals search engine

CHILD SEATS: attachment by seat belt (3/18)

Three-seat van version

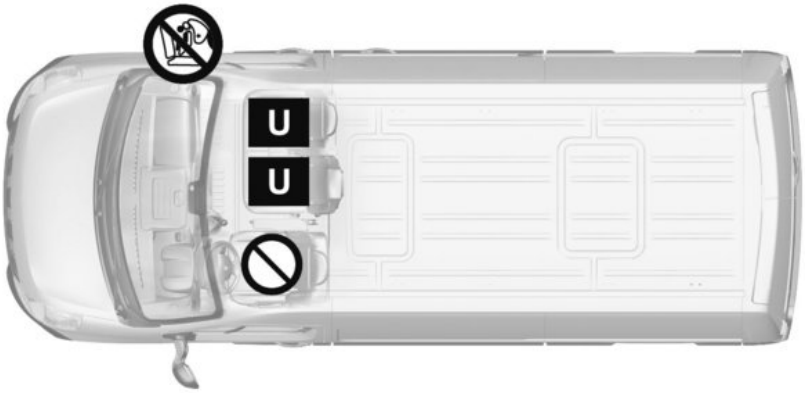

31563

Check the status of the air bag before fitting a child seat or allowing a passenger to use the seat.

Seat not suitable for fitting child seats.

Child seat attached using the belt

U Seat allowing a child seat with “Universal” approval to be attached by seat belt; check that it can be fitted.

Using a child safety system which is not approved for this vehicle will not correctly protect the baby or child. They risk serious or even fatal injury.

RISK OF DEATH OR SERIOUS INJURY: before installing a child seat on the front passenger seat, check that the air bag has been deactivated (refer to "Child safety: front passenger air bag deactivation/activation" Section 1).

Downloaded from www.Manualslib.com manuals search engine

CHILD SEATS: attachment by seat belt (4/18)

The table below summarises the information already shown on the diagram on the previous page, to ensure the regulations in force are respected.

Three-seat van version		WITH PASSENGER AIR BAG		WITHOUT PASSENGER AIR BAG	
Child seat group	**Weight of the child**	**Central front passenger seat**	**Side front passenger seat**	**Central front passenger seat**	**Side front passenger seat**
Rear-facing shell seat Group 0 or 0 +	< 13 kg	U (1)	U (1)	U	U
Rear-facing seat Group 0+ and 1	< 13 kg and 9 to 18 kg	U (1)	U (1)	U	U
Forward-facing seat Group 1	9 to 18 kg	U (1)	U (1)	U	U
Booster seat Group 2 and 3	15 kg to 25 kg and 22 to 36 kg	U (1)	U (1)	U	U

U = Seat allowing a child seat with “Universal” approval to be attached by seat belt; check that it can be fitted.

(1) RISK OF DEATH OR SERIOUS INJURY: before fitting a rear-facing child seat in this position, check that the air bag has been deactivated (refer to the information on “Child safety: deactivating/activating the front passenger air bag” in Section 1).

Downloaded from www.Manualslib.com manuals search engine

CHILD SEATS: attachment by seat belt (5/18)

Double cab version

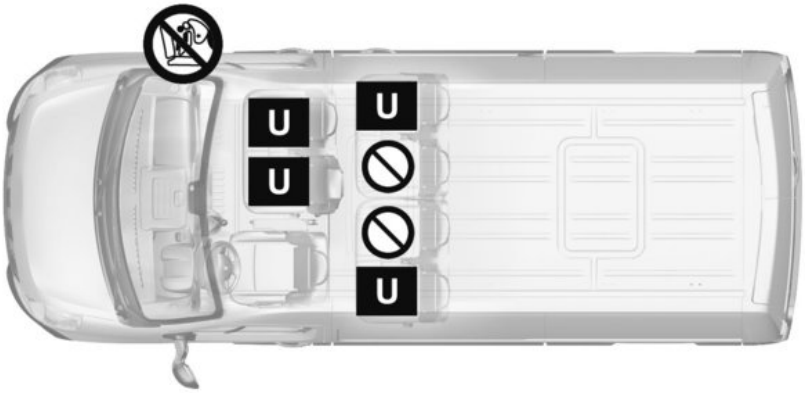

Check the status of the air bag before fitting a child seat or allowing a passenger to use the seat.

Seat not suitable for fitting child seats.

Child seat attached using the belt

U Seat allowing a child seat with "Universal" approval to be attached by seat belt; check that it can be fitted.

Using a child safety system which is not approved for this vehicle will not correctly protect the baby or child. They risk serious or even fatal injury.

RISK OF DEATH OR SERIOUS INJURY: before fitting a rear-facing child seat in this position, check that the air bag has been deactivated (refer to the information on "Child safety: deactivating/activating the front passenger air bag" in Section 1).

Downloaded from www.Manualslib.com manuals search engine

CHILD SEATS: attachment by seat belt (6/18)

The table below summarises the information already shown on the diagram on the previous page, to ensure the regulations in force are respected.

Double cab version		WITH PASSENGER AIR BAG		WITHOUT PASSENGER AIR BAG		Rear side seats	Rear central seats
Child seat group	**Weight of the child**	**Central front passenger seat**	**Side front passenger seat**	**Central front passenger seat**	**Side front passenger seat**		
Rear-facing shell seat Group 0 or 0 +	< 13 kg	U (1)	U (1)	U	U	U	X
Rear-facing seat Group 0+ and 1	< 13 kg and 9 to 18 kg	U (1)	U (1)	U	U	U	X
Forward-facing seat Group 1	9 to 18 kg	U (1)	U (1)	U	U	U	X
Booster seat Group 2 and 3	15 kg to 25 kg and 22 to 36 kg	U (1)	U (1)	U	U	U	X

X = Seat not suitable for fitting child seats.

U = Seat allowing a child seat with “Universal” approval to be attached by seat belt; check that it can be fitted.

(1) RISK OF DEATH OR SERIOUS INJURY: before fitting a rear-facing child seat in this position, check that the air bag has been deactivated (refer to the information on “Child safety: deactivating/activating the front passenger air bag” in Section 1).

Downloaded from www.Manualslib.com manuals search engine

CHILD SEATS: attachment by seat belt (7/18)

The table below summarises the information already shown on the diagram on the next page, to ensure the regulations in force are respected.

5-seater Combi version		Front seats		Rear seats		
				2nd row side seats		
Child seat group	**Weight of the child**	**WITH PASSENGER AIRBAG** (3)	**WITHOUT PASSENGER AIR BAG**	**Behind driver**	**Behind front passenger**	**2nd row centre seat**
Carrycot fitted across the vehicle Group 0	< 10 kg	X	X	X	X	X
Rear-facing shell seat Group 0 or 0 +	< 13 kg	U	U	U (1)	X	X
Rear-facing seat Group 0+ and 1	< 13 kg and 9 to 18 kg	U	U	U (1)	X	X
Forward-facing seat Group 1	9 to 18 kg	U	U (2)	U (2)	UF (2)	UF (2)
Booster seat Group 2 and 3	15 kg to 25 kg and 22 to 36 kg	U (2)	U (2)	U (2)	UF (2)	UF (2)

Downloaded from www.Manualslib.com manuals search engine

CHILD SEATS: attachment by seat belt (8/18)

X = Seat not suitable for fitting child seats.
U = Seat which allows a child seat with “Universal” approval to be installed using a seat belt; check that it can be fitted.
UF = Seat which only allows a forward-facing seat with “Universal” approval to be attached with a seat belt; check that it can be fitted.

(1) Move the front seat as far forward as possible to install a rear-facing child seat, then move back the seat in front as far as it will go, although without allowing it to come into contact with the child seat.

(2) Forward-facing child seat; position the seatback of the child seat in contact with the seatback of the vehicle seat. Adjust the height of the headrest or remove it if necessary; do not push the seat in front of the child more than halfway back on its runners and do not recline the seatback more than 25°.

(3) RISK OF DEATH OR SERIOUS INJURY: before installing a child seat on the front passenger seat, check that the airbag has been deactivated (refer to “Child safety: front passenger airbag deactivation, activation” Section 1).

Downloaded from www.Manualslib.com manuals search engine

CHILD SEATS: attachment by seat belt (9/18)

5-seater Combi version

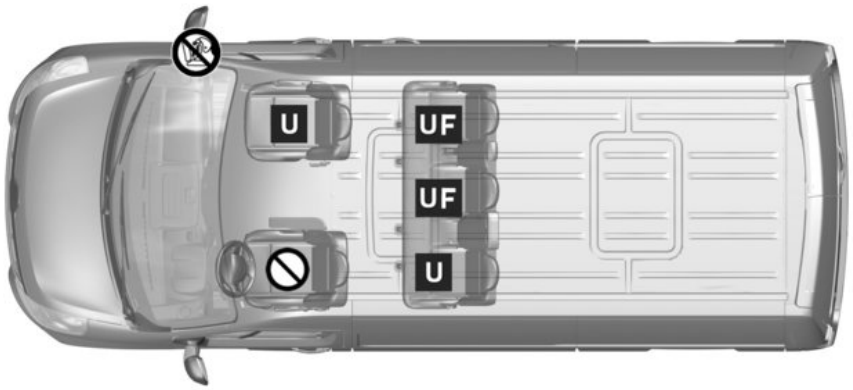

38801

Check the status of the air bag before fitting a child seat or allowing a passenger to use the seat.

RISK OF DEATH OR SERIOUS INJURY: before fitting a rear-facing child seat on the front passenger seat, check that the air bag has been deactivated (refer to the information on “Deactivating the front passenger air bag” in Section 1).

Using a child safety system which is not approved for this vehicle will not correctly protect the baby or child. They risk serious or even fatal injury.

Child seat attached using the belt

U Seat which allows a child seat with “Universal” approval to be attached by a seat belt;

Seat not suitable for fitting child seats.

UF Seat which **only** allows a **forward-facing seat** with “Universal” approval to be attached with a seat belt.

Downloaded from www.Manualslib.com manuals search engine

CHILD SEATS: attachment by seat belt (10/18)

6-seater Combi version

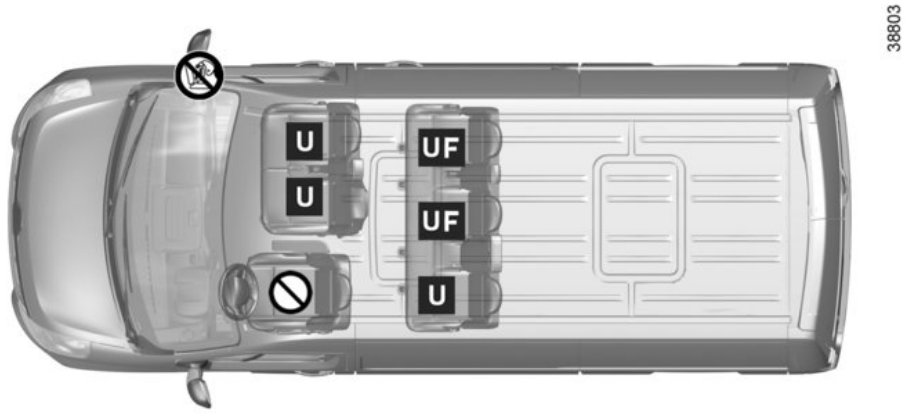

Check the status of the air bag before fitting a child seat or allowing a passenger to use the seat.

RISK OF DEATH OR SERIOUS INJURY: before fitting a rear-facing child seat on the front passenger seat, check that the air bag has been deactivated (refer to the information on “Deactivating the front passenger air bag” in Section 1).

Using a child safety system which is not approved for this vehicle will not correctly protect the baby or child. They risk serious or even fatal injury.

Child seat attached using the belt

U Seat which allows a child seat with “Universal” approval to be attached by a seat belt;

Seat not suitable for fitting child seats.

UF Seat which **only** allows a **forward-facing seat** with “Universal” approval to be attached with a seat belt.

Downloaded from www.Manualslib.com manuals search engine

CHILD SEATS: attachment by seat belt (11/18)

The table below summarises the information already shown on the diagram on the previous page, to ensure the regulations in force are respected.

6-seater Combi version		Front seats				Rear seats		
Child seat group	**Weight of the child**	**WITH PASSENGER AIRBAG** (3)		**WITHOUT PASSENGER AIR BAG**		**2nd row side seats**		**2nd row centre seat**
		central	**side**	**central**	**side**	**Behind driver**	**Behind front passenger**	
Carrycot fitted across the vehicle Group 0	< 10 kg	X	X	X	X	X	X	X
Rear-facing shell seat Group 0 or 0 +	< 13 kg	U	U	U	U	U (1)	X	X
Rear-facing seat Group 0+ and 1	< 13 kg and 9 to 18 kg	U	U	U	U	U (1)	X	X
Forward-facing seat Group 1	9 to 18 kg	U (2)	U (2)	U (2)	U (2)	U (2)	UF (2)	UF (2)
Booster seat Group 2 and 3	15 kg to 25 kg and 22 to 36 kg	U (2)	U (2)	U (2)	U (2)	U (2)	UF (2)	UF (2)

Downloaded from www.Manualslib.com manuals search engine

CHILD SEATS: attachment by seat belt (12/18)

X = Seat not suitable for fitting child seats.
U = Seat which allows a child seat with “Universal” approval to be installed using a seat belt; check that it can be fitted.
UF = Seat which only allows a forward-facing seat with “Universal” approval to be attached with a seat belt; check that it can be fitted.

(1) Move the front seat as far forward as possible to install a rear-facing child seat, then move back the seat in front as far as it will go, although without allowing it to come into contact with the child seat.

(2) Forward-facing child seat; position the seatback of the child seat in contact with the seatback of the vehicle seat. Adjust the height of the headrest or remove it if necessary; do not push the seat in front of the child more than halfway back on its runners and do not recline the seatback more than 25°.

(3) RISK OF DEATH OR SERIOUS INJURY: before installing a child seat on the front passenger seat, check that the airbag has been deactivated (refer to “Child safety: front passenger airbag deactivation, activation” Section 1).

Downloaded from www.Manualslib.com manuals search engine

CHILD SEATS: attachment by seat belt (13/18)

The table below summarises the information already shown on the diagram on the next page, to ensure the regulations in force are respected.

8-seater Combi version		Front seats		Rear seats			
Child seat group	**Weight of the child**	**WITH PASSENGER AIRBAG** (1)	**WITHOUT PASSENGER AIR BAG**	**2nd row side seats**		**2nd row centre seat**	**3rd row**
		central	**central**	**Behind driver**	**Behind front passenger**		
Carrycot fitted across the vehicle Group 0	< 10 kg	X	X	X	X	X	X
Rear-facing shell seat Group 0 or 0 +	< 13 kg	U	U	U (1)	X	X	X
Rear-facing seat Group 0+ and 1	< 13 kg and 9 to 18 kg	U	U	U (2)	X	X	X
Forward-facing seat Group 1	9 to 18 kg	U (2)	U (2)	U (2)	UF (2)	UF (2)	X
Booster seat Group 2 and 3	15 kg to 25 kg and 22 to 36 kg	U (2)	U (2)	U (2)	UF (2)	UF (2)	X

Downloaded from www.Manualslib.com manuals search engine

CHILD SEATS: attachment by seat belt (14/18)

X = Seat not suitable for fitting child seats.
U = Seat which allows a child seat with “Universal” approval to be installed using a seat belt; check that it can be fitted.
UF = Seat which only allows a forward-facing seat with “Universal” approval to be attached with a seat belt; check that it can be fitted.

(1) Move the front seat as far forward as possible to install a rear-facing child seat, then move back the seat in front as far as it will go, although without allowing it to come into contact with the child seat.

(2) Forward-facing child seat; position the seatback of the child seat in contact with the seatback of the vehicle seat. Adjust the height of the headrest or remove it if necessary; do not push the seat in front of the child more than halfway back on its runners and do not recline the seatback more than 25°.

(3) RISK OF DEATH OR SERIOUS INJURY: before installing a child seat on the front passenger seat, check that the airbag has been deactivated (refer to “Child safety: front passenger airbag deactivation, activation” Section 1).

Downloaded from www.Manualslib.com manuals search engine

CHILD SEATS: attachment by seat belt (15/18)

8-seater Combi version

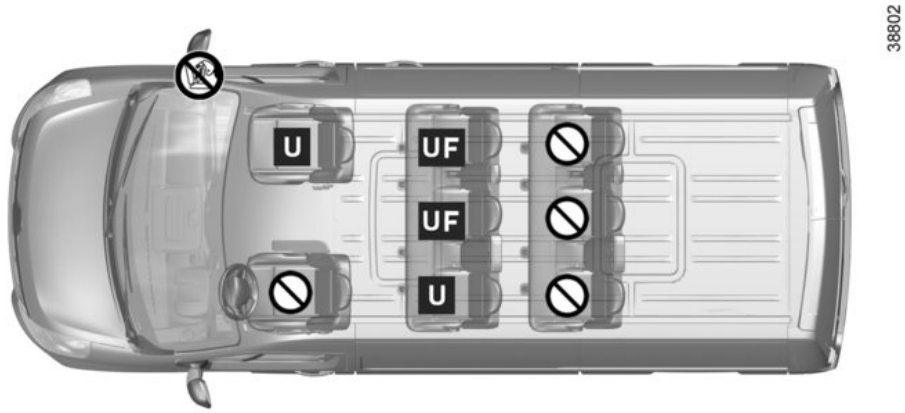

Check the status of the air bag before fitting a child seat or allowing a passenger to use the seat.

RISK OF DEATH OR SERIOUS INJURY: before fitting a rear-facing child seat on the front passenger seat, check that the air bag has been deactivated (refer to the information on “Deactivating the front passenger air bag” in Section 1).

Using a child safety system which is not approved for this vehicle will not correctly protect the baby or child. They risk serious or even fatal injury.

Child seat attached using the belt

U Seat which allows a child seat with “Universal” approval to be attached by a seat belt;

Seat not suitable for fitting child seats.

UF Seat which **only** allows a **forward-facing seat** with “Universal” approval to be attached with a seat belt.

Downloaded from www.Manualslib.com manuals search engine

CHILD SEATS: attachment by seat belt (16/18)

9-seater Combi version

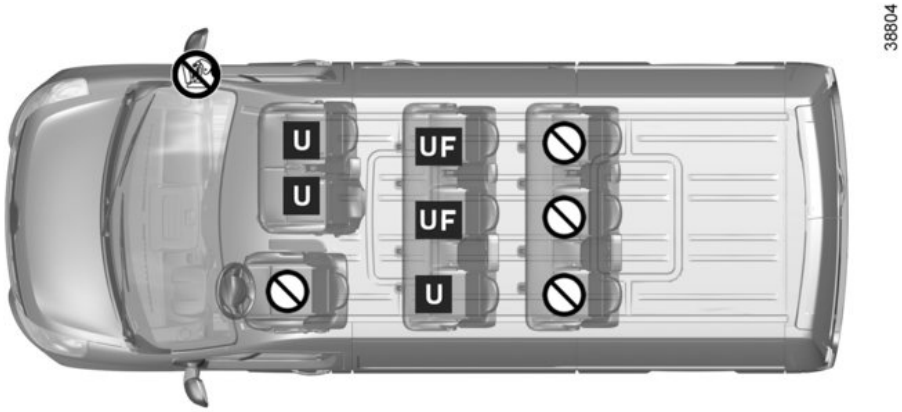

Check the status of the air bag before fitting a child seat or allowing a passenger to use the seat.

RISK OF DEATH OR SERIOUS INJURY: before fitting a rear-facing child seat on the front passenger seat, check that the air bag has been deactivated (refer to the information on “Deactivating the front passenger air bag” in Section 1).

Using a child safety system which is not approved for this vehicle will not correctly protect the baby or child. They risk serious or even fatal injury.

Child seat attached using the belt

U Seat which allows a child seat with “Universal” approval to be attached by a seat belt;

Seat not suitable for fitting child seats.

UF Seat which **only** allows a **forward-facing seat** with “Universal” approval to be attached with a seat belt.

Downloaded from www.Manualslib.com manuals search engine

CHILD SEATS: attachment by seat belt (17/18)

The table below summarises the information already shown on the diagram on the previous page, to ensure the regulations in force are respected.

9-seater Combi version		Front seats				Rear seats			
Child seat group	**Weight of the child**	**WITH PASSENGER AIRBAG** (3)		**WITHOUT PASSENGER AIR BAG**		**2nd row side seats**		**2nd row centre seat**	**3rd row**
		central	**side**	**central**	**side**	**Behind driver**	**Behind front passenger**		
Carrycot fitted across the vehicle Group 0	< 10 kg	X	X	X	X	X	X	X	X
Rear-facing shell seat Group 0 or 0 +	< 13 kg	U	U	U	U	U (1)	X	X	X
Rear-facing seat Group 0+ and 1	< 13 kg and 9 to 18 kg	U	U	U	U	U (1)	X	X	X
Forward-facing seat Group 1	9 to 18 kg	U (2)	U (2)	U (2)	U (2)	U (2)	UF (2)	UF (2)	X
Booster seat Group 2 and 3	15 kg to 25 kg and 22 to 36 kg	U (2)	U (2)	U (2)	U (2)	U (2)	UF (2)	UF (2)	X

Downloaded from www.Manualslib.com manuals search engine

CHILD SEATS: attachment by seat belt (18/18)

X = Seat not suitable for fitting child seats.
U = Seat which allows a child seat with “Universal” approval to be installed using a seat belt; check that it can be fitted.
UF = Seat which only allows a forward-facing seat with “Universal” approval to be attached with a seat belt; check that it can be fitted.

(1) Move the front seat as far forward as possible to install a rear-facing child seat, then move back the seat in front as far as it will go, although without allowing it to come into contact with the child seat.

(2) Forward-facing child seat; position the seatback of the child seat in contact with the seatback of the vehicle seat. Adjust the height of the headrest or remove it if necessary; do not push the seat in front of the child more than halfway back on its runners and do not recline the seatback more than 25°.

(3) RISK OF DEATH OR SERIOUS INJURY: before installing a child seat on the front passenger seat, check that the airbag has been deactivated (refer to “Child safety: front passenger airbag deactivation, activation” Section 1).

Downloaded from www.Manualslib.com manuals search engine

CHILD SEATS: attachment using the ISOFIX system (1/12)

The table below summarises the information already shown in the diagram on the following pages, to ensure the applicable regulations are respected.

5-seater Combi version			Front seats	Rear seats		
				2nd row side seats		2nd row centre seat
Child seat group	**Weight of the child**	**Size of Isofix seat**		**Behind driver**	**Behind front passenger**	
Carrycot fitted across the vehicle Group 0	< 10 kg	F, G	X	X	X	X
Rear-facing shell seat Group 0 or 0 +	< 13 kg	E	X	IL (1)	X	X
Rear-facing seat Group 0+ and 1	< 13 kg and 9 to 18 kg	C, D	X	IL (1)	X	X
Forward-facing seat Group 1	9 to 18 kg	A, B, B1	X	IUF - IL (2)	X	IUF - IL (2)
Booster seat Group 2 and 3	15 kg to 25 kg and 22 to 36 kg		X	X	X	X

Downloaded from www.Manualslib.com manuals search engine

CHILD SEATS: attachment using the ISOFIX system (2/12)

X = Seat not suitable for fitting child seats ISOFIX.
IUF/IL = On equipped vehicles, seat which allows an approved “Universal”/“semi-universal” or “vehicle specific” child seat to be attached using the ISOFIX system; check that it can be fitted.

(1) Move the front seat as far forward as possible to install a rear-facing child seat, then move back the seat in front as far as it will go, although without allowing it to come into contact with the child seat.

(2) Forward-facing child seat; position the seatback of the child seat in contact with the seatback of the vehicle seat. In all situations, remove the rear headrest of the seat on which the child seat is positioned. This must be done before fitting the child seat (please refer to the section entitled “Rear headrests” in Section 3). Do not push the seat in front of the child more than halfway back on its runners and do not recline the seatback more than 25°.

Downloaded from www.Manualslib.com manuals search engine

CHILD SEATS: attachment using the ISOFIX system (3/12)

5-seater Combi

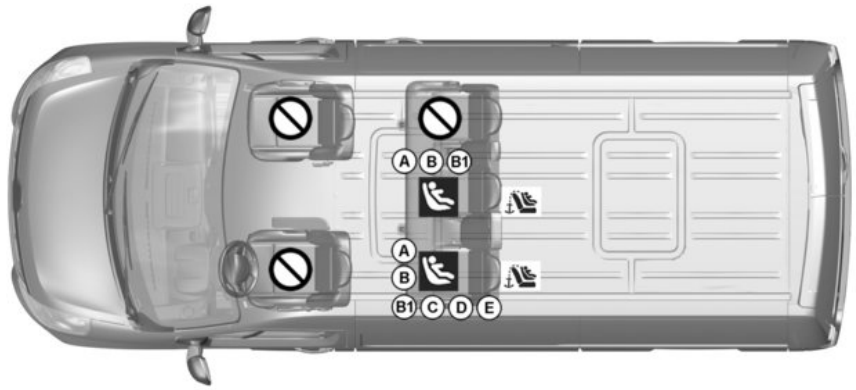

Seat which does not allow a child seat to be fitted.

Using a child safety system which is not approved for this vehicle will not correctly protect the baby or child. They risk serious or even fatal injury.

Child seat attached using the ISOFIX mounting

Seat which allows an ISOFIX child seat to be fitted.

The rear seats are fitted with an anchorage point which allows a forward-facing ISOFIX child seat with universal approval to be fitted. The anchorage points are located in the luggage compartment and are visible.

The size of the ISOFIX child seat is indicated by a letter:

- A, B and B1: for forward-facing seats in group 1 (9 to 18 kg);
- C: rear-facing seats in group 1 (9 to 18 kg);
- D and E: shell seat or rear-facing seats in group 0 or 0+ (less than 13 kg);
- F and G: carrycots in group 0 (less than 10 kg).

Downloaded from www.Manualslib.com manuals search engine

CHILD SEATS: attachment using the ISOFIX system (4/12)

6-seater Combi

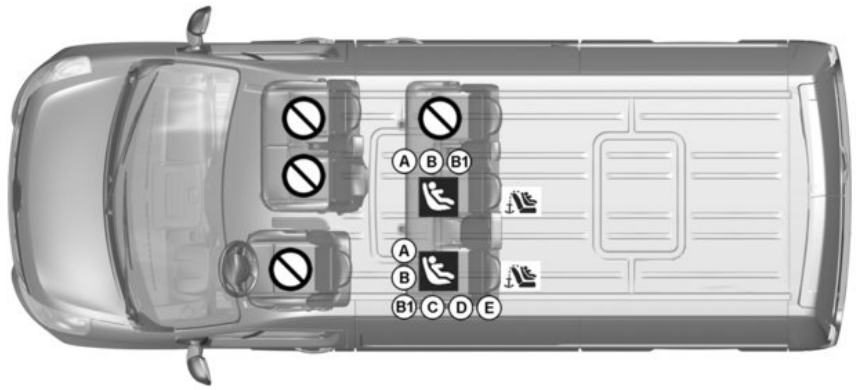

Seat which does not allow a child seat to be fitted.

Using a child safety system which is not approved for this vehicle will not correctly protect the baby or child. They risk serious or even fatal injury.

Child seat attached using the ISOFIX mounting

Seat which allows an ISOFIX child seat to be fitted.

The rear seats are fitted with an anchorage point which allows a forward-facing ISOFIX child seat with universal approval to be fitted. The anchorage points are located in the luggage compartment and are visible.

The size of the ISOFIX child seat is indicated by a letter:

– A, B and B1: for forward-facing seats in group 1 (9 to 18 kg);
– C: rear-facing seats in group 1 (9 to 18 kg);
– D and E: shell seat or rear-facing seats in group 0 or 0+ (less than 13 kg);
– F and G: carrycots in group 0 (less than 10 kg).

Downloaded from www.Manualslib.com manuals search engine

CHILD SEATS: attachment using the ISOFIX system (5/12)

The table below summarises the information already shown on the diagram on the previous page, to ensure the applicable regulations are respected.

6-seater Combi version			Front seats		Rear seats		
					2nd row side seats		
Child seat group	**Weight of the child**	**Size of Isofix seat**	**central**	**side**	**Behind driver**	**Behind front passenger**	**2nd row centre seat**
Carrycot fitted across the vehicle Group 0	< 10 kg	F, G	X	X	X	X	X
Rear-facing shell seat Group 0 or 0 +	< 13 kg	E	X	X	IL (1)	X	X
Rear-facing seat Group 0+ and 1	< 13 kg and 9 to 18 kg	C, D	X	X	IL (1)	X	X
Forward-facing seat Group 1	9 to 18 kg	A, B, B1	X	X	IUF - IL (2)	X	IUF - IL (2)
Booster seat Group 2 and 3	15 kg to 25 kg and 22 to 36 kg		X	X	X	X	X

Downloaded from www.Manualslib.com manuals search engine

CHILD SEATS: attachment using the ISOFIX system (6/12)

X = Seat not suitable for fitting child seats ISOFIX.
IUF/IL = On equipped vehicles, seat which allows an approved “Universal”/“semi-universal” or “vehicle specific” child seat to be attached using the ISOFIX system; check that it can be fitted.

(1) Move the front seat as far forward as possible to install a rear-facing child seat, then move back the seat in front as far as it will go, although without allowing it to come into contact with the child seat.

(2) Forward-facing child seat; position the seatback of the child seat in contact with the seatback of the vehicle seat. In all situations, remove the rear headrest of the seat on which the child seat is positioned. This must be done before fitting the child seat (please refer to the section entitled “Rear headrests” in Section 3). Do not push the seat in front of the child more than halfway back on its runners and do not recline the seatback more than 25°.

Downloaded from www.Manualslib.com manuals search engine

CHILD SEATS: attachment using the ISOFIX system (7/12)

The table below summarises the information already shown on the diagram on the following pages, to ensure the applicable regulations are respected.

8-seater Combi version			Front seats	Rear seats			
				2nd row side seats			
Child seat group	**Weight of the child**	**Size of Isofix seat**	**central**	**Behind driver**	**Behind front passenger**	**2nd row centre seat**	**3rd row**
Carrycot fitted across the vehicle Group 0	< 10 kg	F, G	X	X	X	X	X
Rear-facing shell seat Group 0 or 0 +	< 13 kg	E	X	IL (1)	X	X	X
Rear-facing seat Group 0+ and 1	< 13 kg and 9 to 18 kg	C, D	X	IL (1)	X	X	X
Forward-facing seat Group 1	9 to 18 kg	A, B, B1	X	IUF - IL (2)	X	IUF - IL (2)	X
Booster seat Group 2 and 3	15 kg to 25 kg and 22 to 36 kg		X	X	X	X	X

Downloaded from www.Manualslib.com manuals search engine

CHILD SEATS: attachment using the ISOFIX system (8/12)

X = Seat not suitable for fitting child seats ISOFIX.
IUF/IL = On equipped vehicles, seat which allows an approved “Universal”/“semi-universal” or “vehicle specific” child seat to be attached using the ISOFIX system; check that it can be fitted.

(1) Move the front seat as far forward as possible to install a rear-facing child seat, then move back the seat in front as far as it will go, although without allowing it to come into contact with the child seat.

(2) Forward-facing child seat; position the seatback of the child seat in contact with the seatback of the vehicle seat. In all situations, remove the rear headrest of the seat on which the child seat is positioned. This must be done before fitting the child seat (please refer to the section entitled “Rear headrests” in Section 3). Do not push the seat in front of the child more than halfway back on its runners and do not recline the seatback more than 25°.

Downloaded from www.Manualslib.com manuals search engine

CHILD SEATS: attachment using the ISOFIX system (9/12)

8-seater Combi

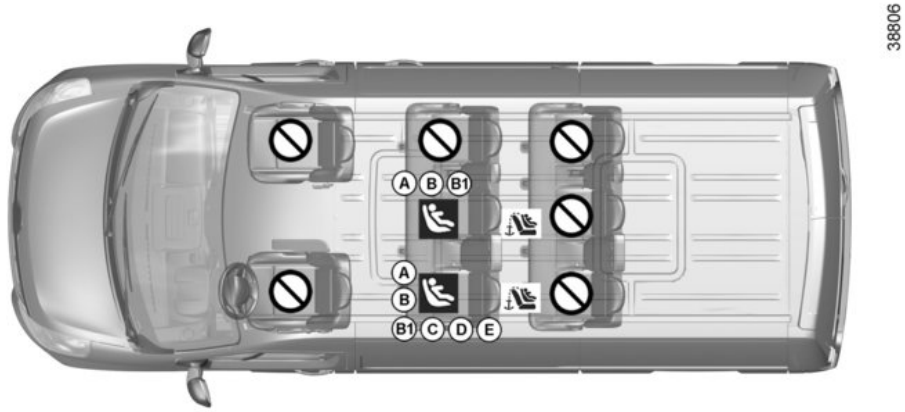

Seat which does not allow a child seat to be fitted.

Using a child safety system which is not approved for this vehicle will not correctly protect the baby or child. They risk serious or even fatal injury.

Child seat attached using the ISOFIX mounting

Seat which allows an ISOFIX child seat to be fitted.

The rear seats are fitted with an anchorage point which allows a forward-facing ISOFIX child seat with universal approval to be fitted. The anchorage points are located in the luggage compartment and are visible.

The size of the ISOFIX child seat is indicated by a letter:

- A, B and B1: for forward-facing seats in group 1 (9 to 18 kg);
- C: rear-facing seats in group 1 (9 to 18 kg);
- D and E: shell seat or rear-facing seats in group 0 or 0+ (less than 13 kg);
- F and G: carrycots in group 0 (less than 10 kg).

Downloaded from www.Manualslib.com manuals search engine

CHILD SEATS: attachment using the ISOFIX system (10/12)

9-seater Combi

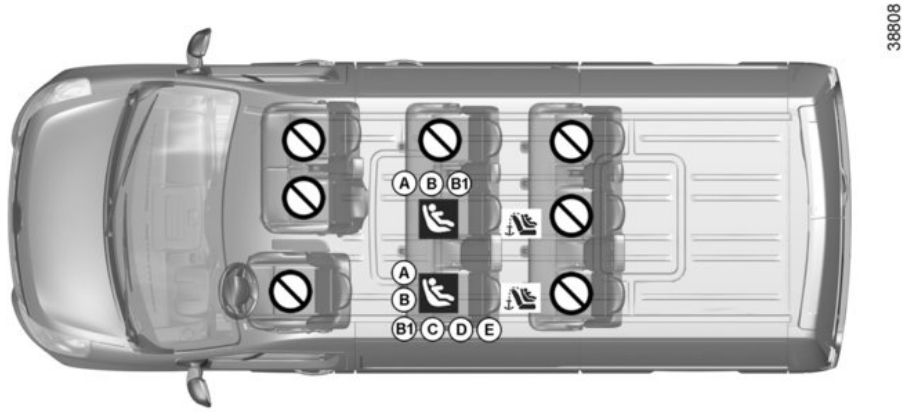

Seat which does not allow a child seat to be fitted.

Using a child safety system which is not approved for this vehicle will not correctly protect the baby or child. They risk serious or even fatal injury.

Child seat attached using the ISOFIX mounting

Seat which allows an ISOFIX child seat to be fitted.

The rear seats are fitted with an anchorage point which allows a forward-facing ISOFIX child seat with universal approval to be fitted. The anchorage points are located in the luggage compartment and are visible.

The size of the ISOFIX child seat is indicated by a letter:
- A, B and B1: for forward-facing seats in group 1 (9 to 18 kg);
- C: rear-facing seats in group 1 (9 to 18 kg);
- D and E: shell seat or rear-facing seats in group 0 or 0+ (less than 13 kg);
- F and G: carrycots in group 0 (less than 10 kg).

Downloaded from www.Manualslib.com manuals search engine

CHILD SEATS: attachment using the ISOFIX system (11/12)

The table below summarises the information already shown on the diagram on the previous page, to ensure the applicable regulations are respected.

9-seater Combi version			Front seats		Rear seats			
					2nd row side seats			
Child seat group	**Weight of the child**	**Size of Isofix seat**	**central**	**side**	**Behind driver**	**Behind front passenger**	**2nd row centre seat**	**3rd row**
Carrycot fitted across the vehicle Group 0	< 10 kg	F, G	X	X	X	X	X	X
Rear-facing shell seat Group 0 or 0 +	< 13 kg	E	X	X	IL (1)	X	X	X
Rear-facing seat Group 0+ and 1	< 13 kg and 9 to 18 kg	C, D	X	X	IL (1)	X	X	X
Forward-facing seat Group 1	9 to 18 kg	A, B, B1	X	X	IUF - IL (2)	X	IUF - IL (2)	X
Booster seat Group 2 and 3	15 kg to 25 kg and 22 to 36 kg		X	X	X	X	X	X

Downloaded from www.Manualslib.com manuals search engine

CHILD SEATS: attachment using the ISOFIX system (12/12)

X = Seat not suitable for fitting child seats ISOFIX.
IUF/IL = On equipped vehicles, seat which allows an approved “Universal”/“semi-universal” or “vehicle specific” child seat to be attached using the ISOFIX system; check that it can be fitted.

(1) Move the front seat as far forward as possible to install a rear-facing child seat, then move back the seat in front as far as it will go, although without allowing it to come into contact with the child seat.

(2) Forward-facing child seat; position the seatback of the child seat in contact with the seatback of the vehicle seat. In all situations, remove the rear headrest of the seat on which the child seat is positioned. This must be done before fitting the child seat (please refer to the section entitled “Rear headrests” in Section 3). Do not push the seat in front of the child more than halfway back on its runners and do not recline the seatback more than 25°.

Downloaded from www.Manualslib.com manuals search engine

CHILD SAFETY: deactivating/activating the front passenger air bag (1/3)

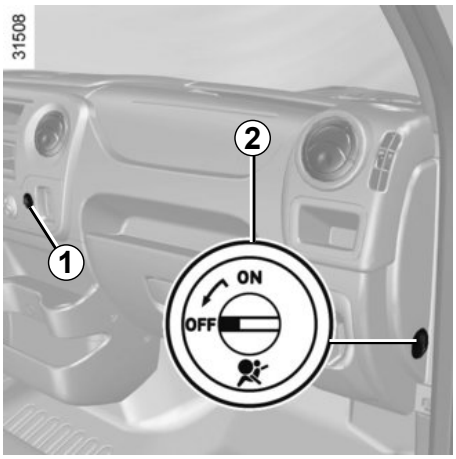

Deactivating the front passenger air bag
(depending on the vehicle)

You **must** deactivate the devices in addition to the front passenger seat belt before fitting a child seat in the front passenger seat.

To deactivate the air bag: with the vehicle stopped and the ignition off, press and turn lock ***2*** to the **OFF** position.

With the ignition on, you **must** check that the warning light ***1*** is lit on the dashboard and, depending on the vehicle, that the message “Passenger airbag off” is displayed.

This light remains permanently lit to let you know that you can fit a child seat.

The front passenger airbag must also be deactivated when a forward-facing child seat is installed in the front passenger seat.

The passenger air bag must only be deactivated or activated **with the ignition off**.

If it is interfered with when the vehicle is being driven, indicator lights and will come on.

Switch the ignition off then on again to reset the air bag in accordance with the lock.

Downloaded from www.Manualslib.com manuals search engine

CHILD SAFETY: deactivating/activating the front passenger air bag (2/3)

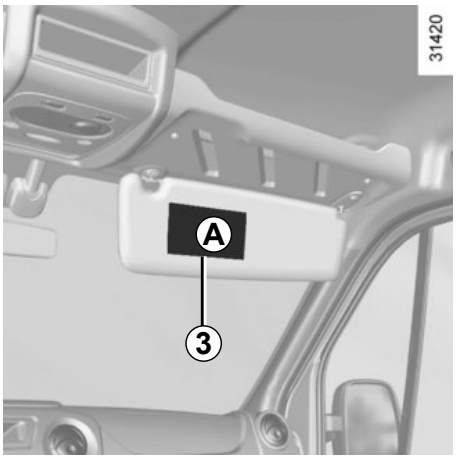

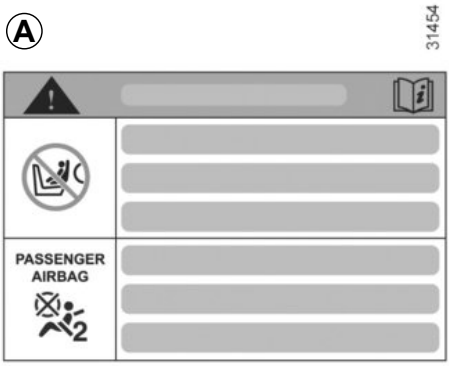

The markings on the dashboard and labels ***A*** on each side of the passenger sun visor ***3*** (for example, the labels shown above) will remind you of these instructions.

DANGER

Since operation of the front passenger airbag is not compatible with the position of a rear-facing child seat, **NEVER** fit a restraint system for a rear-facing child in a seat protected by an **ACTIVATED front AIRBAG**. This can cause the **CHILD'S DEATH** or **SERIOUS INJURY**.

Downloaded from www.Manualslib.com manuals search engine

CHILD SAFETY: deactivating/activating the front passenger air bag (3/3)

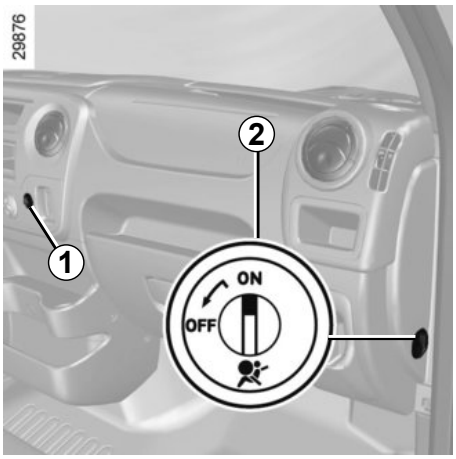

Activation of the front passenger air bag

You should reactivate the air bag as soon as you remove the child seat from the front passenger seat to ensure the protection of the front passenger in the event of an impact.

To reactivate the air bag: with the vehicle stopped and the ignition off, press and turn lock ***2*** to the **ON** position.

With the ignition on, you **must** check that the warning light ***1*** is not lit up on the dashboard.

Operating faults

In the event that the front passenger air bag activation/deactivation system is faulty, child seats must not be fitted to the front seat.
Allowing any other passenger to sit in that seat is not recommended.
Contact your approved Dealer as soon as possible.

DANGER

Since operation of the front passenger airbag is not compatible with the position of a rear-facing child seat, **NEVER** fit a restraint system for a rear-facing child in a seat protected by an **ACTIVATED front AIRBAG**. This can cause the **CHILD'S DEATH** or **SERIOUS INJURY**.

The passenger air bag must only be deactivated or activated when the **vehicle is stationary**. If it is interfered with when the vehicle is being driven, indicator lights and will come on. Switch the ignition off then on again to reset the air bag in accordance with the lock position.

Downloaded from www.Manualslib.com manuals search engine

REAR-VIEW MIRRORS

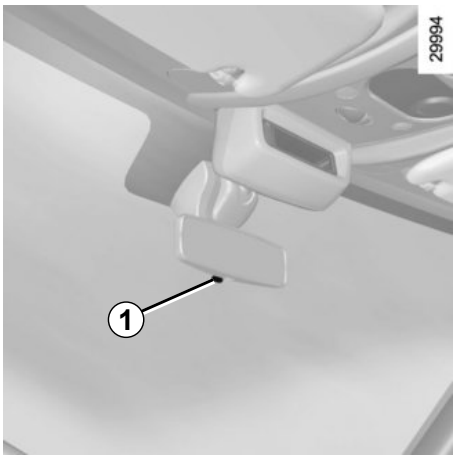

Interior rear view mirror

The interior rear-view mirror is adjustable. When driving at night, to avoid being dazzled by the headlights of the vehicle behind: tilt the small lever ***1*** located behind the rear-view mirror.

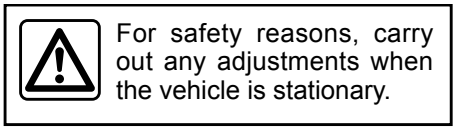

For safety reasons, carry out any adjustments when the vehicle is stationary.

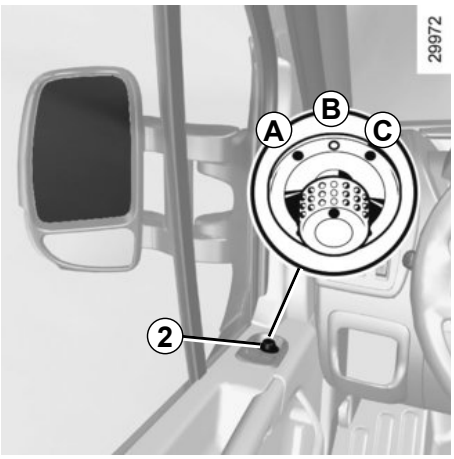

Electrically-adjustable door mirrors

With the ignition on, position control ***2*** on:

A to adjust the left-hand door mirror,
C to adjust the right-hand door mirror,
B to deactivate it.

Heated door mirrors

Depending on the vehicle, the mirrors are heated either alone or in conjunction with the rear windows.

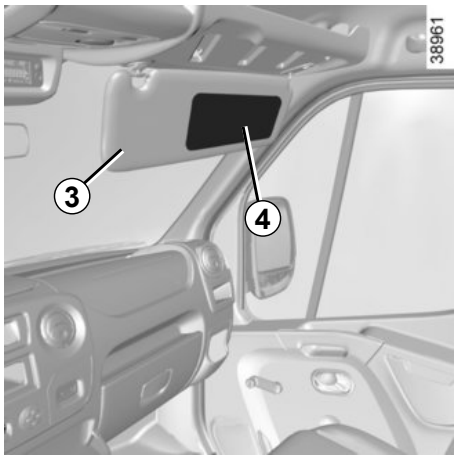

Additional rear-view mirror *4*

(depending on the vehicle)

Lower the sun visor ***3*** to access the special mirror to increase lateral vision when manoeuvring.

Downloaded from www.Manualslib.com manuals search engine

DRIVER'S POSITION, LEFT-HAND DRIVE (1/2)

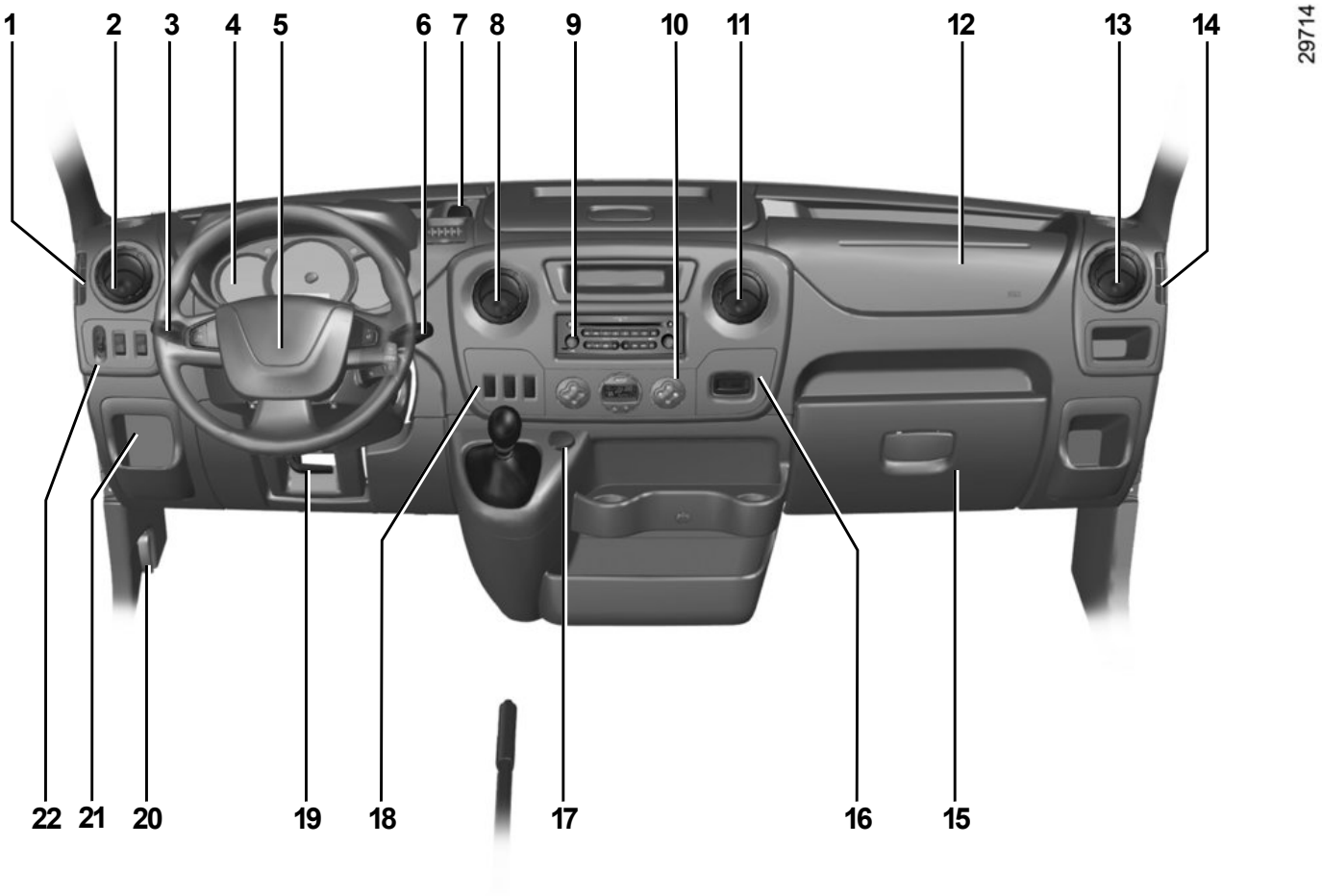

Downloaded from www.Manualslib.com manuals search engine

DRIVER'S POSITION: LEFT-HAND DRIVE (2/2)

The equipment fitted, described below, DEPENDS ON THE VERSION AND COUNTRY.

1 Side window demister outlet.

2 Side air vent.

3 Stalk for:
- direction indicators,
- exterior lights,
- front fog lights,
- rear fog lights.

4 Instrument panel.

5 Location for driver's air bag.

6
- Windscreen wiper/washer stalk.
- Information readout control.

7 Accessories socket.

8 Centre air vent.

9 Location for:
- radio,
- storage compartment.

10 Heating and ventilation controls.

11 Centre air vent.

12 Location for passenger air bag.

13 Side air vent.

14 Side window demister.

15 Storage compartments.

16 Location for:
- storage compartment,
- audio connection socket,
- front passenger air bag deactivation warning light.

17 Cigar lighter or accessories socket.

18 Switches:
- cruise control/speed limiter,
- activation/deactivation of the Stop and Start function,
- activation/deactivation of ECO mode,
- fast idle speed.

19 Steering wheel height adjustment control.

20 Bonnet release.

21 Fuse box.

22 Controls for:
- electric beam height adjustment,
- activation/deactivation of the parking distance control,
- activation/deactivation of the traction control.

Downloaded from www.Manualslib.com manuals search engine

DRIVER'S POSITION, RIGHT-HAND DRIVE (1/2)

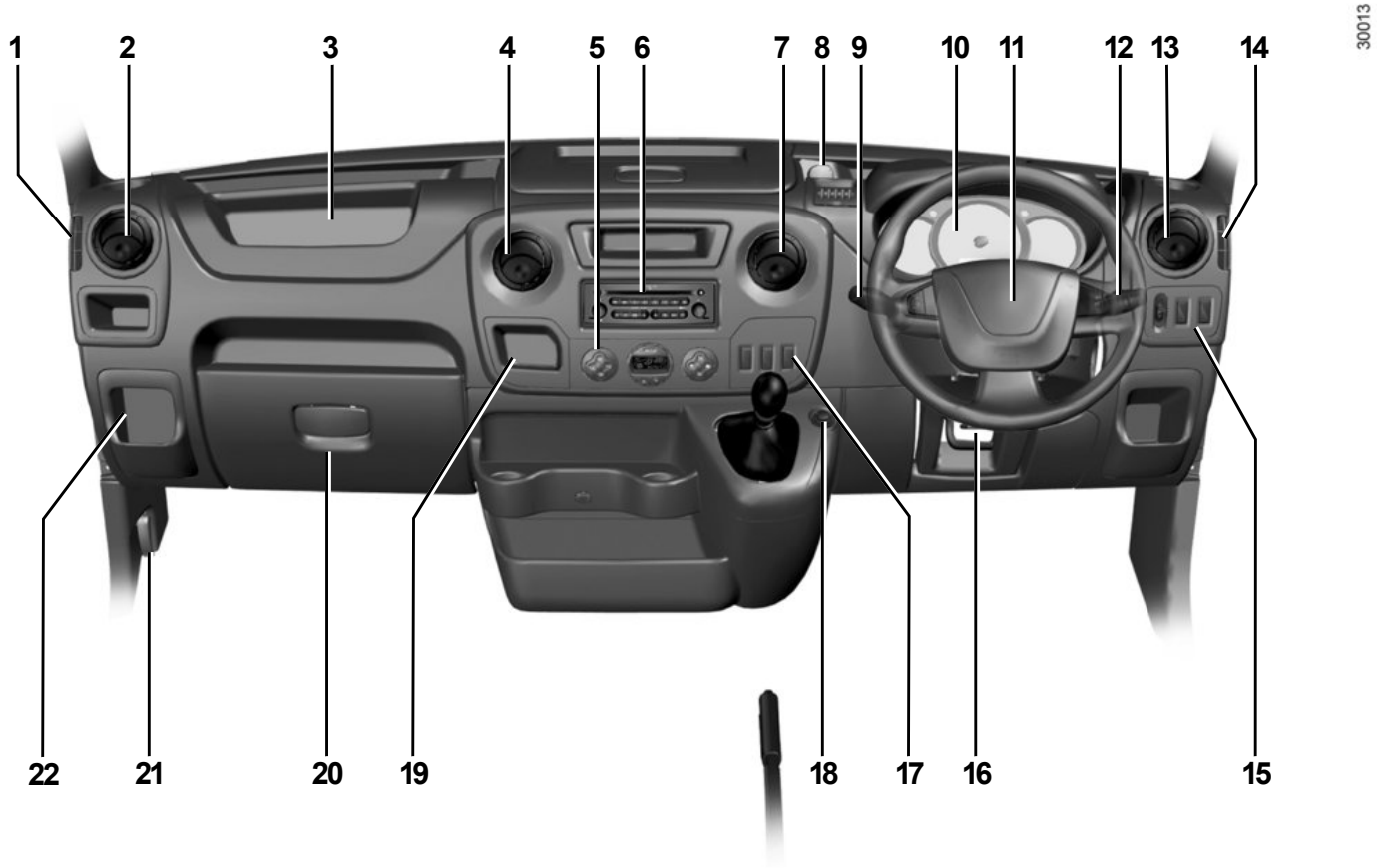

Downloaded from www.Manualslib.com manuals search engine

DRIVER'S POSITION, RIGHT-HAND DRIVE (2/2)

The equipment fitted, described below, DEPENDS ON THE VERSION AND COUNTRY.

1 Side window demister outlet.

2 Side air vent.

3 Location for passenger air bag.

4 Centre air vent.

5 Heating and ventilation controls.

6 Location for:
- radio,
- storage compartment.

7 Centre air vent.

8 Accessories socket.

9 Stalk for:
- direction indicators,
- exterior lights,
- front fog lights,
- rear fog lights.

10 Instrument panel.

11 Location for driver's air bag.

12
- Windscreen wiper/washer stalk.
- Information readout control.

13 Side air vent.

14 Side window demister.

15 Controls for:
- electric beam height adjustment,
- activation/deactivation of the parking distance control,
- activation/deactivation of the traction control.

16 Steering wheel height adjustment control.

17 Switches:
- cruise control/speed limiter,
- activation/deactivation of the Stop and Start function,
- activation/deactivation of ECO mode
- fast idle speed.

18 Cigar lighter or accessories socket.

19 Location for:
- storage compartment,
- audio connection socket,
- front passenger air bag deactivation warning light.

20 Storage compartment.

21 Bonnet release.

22 Fuse box.

Downloaded from www.Manualslib.com manuals search engine

Warning lights (1/4)

The presence and operation of the warning lights DEPEND ON THE EQUIPMENT AND COUNTRY.

Instrument panel *A*

Warning light means you should drive **very carefully to an authorised dealer as soon as possible**. Failure to follow this recommendation risks damaging your vehicle.

Front fog light tell-tale

Rear fog light tell-tale light

Main beam headlight telltale

Dipped beam headlight tell-tale

Automatic main beam headlight indicator light

Please refer to the information on “External signals and lights” in Section 1.

Warning light STOP requires you to stop immediately, for your own safety, as soon as traffic conditions allow. Switch off the engine and do not restart it. Contact an approved Dealer.

Indicator light for left-hand direction indicators

Indicator light for right-hand direction indicators

Battery charge warning light

It should go out as soon as the engine starts. If it comes on when you are driving, it indicates that the circuit has discharged. Stop as soon as traffic conditions allow and contact an approved dealer.

Low fuel level warning light

This goes out as soon as the engine starts. If it lights up or remains lit, fill up with fuel as soon as possible.

If no lights or sounds are apparent, this indicates a fault in the instrument panel. This indicates that it is essential to stop immediately (as soon as traffic conditions allow). Ensure that the vehicle is correctly immobilised and contact an approved Dealer.

Downloaded from www.Manualslib.com manuals search engine

Warning lights (2/4)

The presence and operation of the warning lights DEPEND ON THE EQUIPMENT AND COUNTRY.

STOP light
This comes on when the ignition is switched on and goes out after 3 seconds.
If it comes on, possibly accompanied by other warning lights, stop soon as traffic conditions allow. Contact an approved dealer as soon as possible.
Depending on the vehicle, this warning light is accompanied by a message on the instrument panel.

Coolant temperature warning light
If this remains lit while driving accompanied by the STOP indicator light, it indicates engine overheating. Stop and allow the engine to run at idle speed for about a minute or two. The temperature should drop. Otherwise, stop the engine. Let the engine cool down, then check the coolant level. Contact an approved Dealer if necessary.

Handbrake on and brake circuit incident warning light
This comes on when the ignition is switched on. If it lights up while braking or driving, accompanied by the STOP warning light, this indicates a low level in one of the circuits; it may be dangerous to continue driving - please contact an authorised dealer.

Warning light
This comes on when the ignition is switched on and goes out after about 3 seconds.
If it comes on, possibly accompanied by other warning lights, you should visit an approved dealer as soon as possible.
Depending on the vehicle, this warning light is accompanied by a message on the instrument panel.

Toxic fume filter system warning light
On equipped vehicles, the light comes on when the ignition is switched on then goes out.
– If it lights up continuously accompanied by the warning light, please consult an authorised dealer as soon as possible;
– If it flashes, reduce the engine speed until the light stops flashing. Contact your approved dealer as soon as possible.

Please refer to the information on «Maintenance and anti-pollution advice» in Section 2.

Air bag warning light
This light comes on when the ignition is switched on and goes out within about 3 seconds. If it comes on, there is a fault in the system. Contact an approved dealer as soon as possible.

Not used

Downloaded from www.Manualslib.com manuals search engine

Warning lights (3/4)

The presence and operation of the warning lights DEPEND ON THE EQUIPMENT AND COUNTRY.

Anti-lock braking warning light
This light comes on when the ignition is switched on and goes out within 3 seconds. If it comes on when you are driving, it indicates a fault in the anti-lock braking system. Braking will then occur normally, without the anti-lock system. Contact an approved dealer as soon as possible.

Tyre pressure loss warning
Please refer to the information on the “Tyre pressure loss warning” in Section 2.

Preheating warning light
This should come on when the ignition is switched on. It indicates that the heater plugs are in operation. It goes out after preheating is sufficient and the engine can be started.

Digital tacograph warning light
If it comes on, there is a fault in the system. Refer to the handbook for the equipment.

Engine standby warning light
Please refer to the information on the “Stop and Start Function” in Section 2.

Unavailability of engine standby warning light
Please see information in the paragraph on “Stop and Start Function” in Section 2.

Water in the diesel filter warning light
If it comes on when you are driving, it indicates the presence of water in the diesel. Contact your approved dealer as soon as possible.

Oil pressure warning light
This light comes on when the ignition is switched on and goes out within 3 seconds. If it comes on while you are driving, stop at once and switch off the ignition. Check the oil level. If the level is correct, the light has come on for another reason; contact an approved dealer.

Door status warning light
If it lights up when the ignition is switched on, it indicates that a door is not properly closed.

Traction control warning light
Refer to the information on “Driving correction devices and aids” in Section 2.

Downloaded from www.Manualslib.com manuals search engine

WARNING LIGHTS (4/4)

The presence and operation of the warning lights DEPEND ON THE EQUIPMENT AND COUNTRY.

Brake pad wear warning light
Depending on the vehicle, if the warning light comes on, you must have your brake pads checked as soon as possible.

Lane departure system warning light
Please refer to the information on “Lane departure warning” in Section 2.

Gear change indicator
This lights up to advise you to change to a higher gear (up arrow) or, depending on the vehicle, a lower gear (down arrow).

Electronic Stability Control warning light (ESP).
There are several reasons for the warning light to come on: please refer to information on “Driver correction devices and aids” in Section 2.

Cruise control and speed limiter indicator lights
Refer to the information on the “Speed limiter” and “Cruise control” in Section 2.

Warning light for additive level and faults in the exhaust gas reduction system
Refer to the information on "Additive tank" in Section 1.

On display *B*

Seat belt reminder light
This remains lit when the engine is started, then when the seat belt is not fastened and the vehicle reaches a speed of approximately 10 mph (16 km/h), it flashes and a bleep sounds for approximately 90 seconds.

Passenger airbag OFF
Please refer to the information on “Child safety: deactivating/activating the front passenger airbag” in Section 1.

Downloaded from www.Manualslib.com manuals search engine

Displays and indicators (1/2)

The presence and operation of the display and indicators DEPENDS ON THE LEVEL OF EQUIPMENT AND THE COUNTRY.

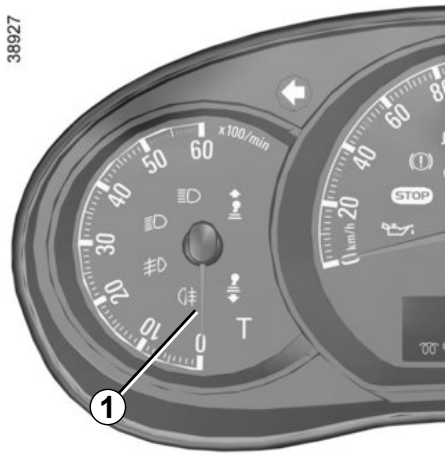

Rev counter *1* (graduations ×1000)

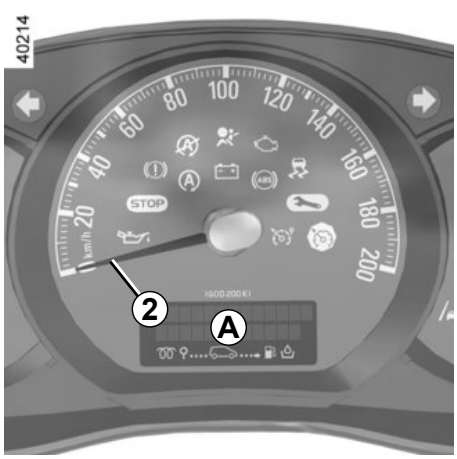

Speedometer *2* (mph or km/h)

Overspeed buzzer

Depending on the vehicle, a beep sounds for 10 seconds approximately every 40 seconds as long as the vehicle is travelling at over 72 miles per hour (120 km/h).

Trip computer and warning system *A*

Refer to the information on the “Trip computer and warning system” in Section 1.

Low engine oil level warning

Depending on the vehicle, when the engine is started and for 30 seconds, display ***A*** alerts the driver when the minimum engine oil level is reached. Refer to the information on the “Engine oil level” in Section 4.

Fuel level gauge

The number of lit squares on the display ***A*** shows the fuel level. When it is at the minimum level, the last square comes on, accompanied by a beep.

The warning light will light up on the instrument panel.

Fill up as soon as possible.

Downloaded from www.Manualslib.com manuals search engine

Displays and indicators (2/2)

The presence and operation of the display and indicators DEPENDS ON THE LEVEL OF EQUIPMENT AND THE COUNTRY.

Fuel gauge *3*

The needle shows the fuel level. When it is at the minimum level, the fuel warning light comes on, accompanied by a beep.

Fill up as soon as possible.

Coolant temperature indicator *4*

In normal use, the needle should be before area ***B***. Under severe conditions, the needle may enter this area.

This is not serious unless the warning light comes on or the message “engine overheating” appears.

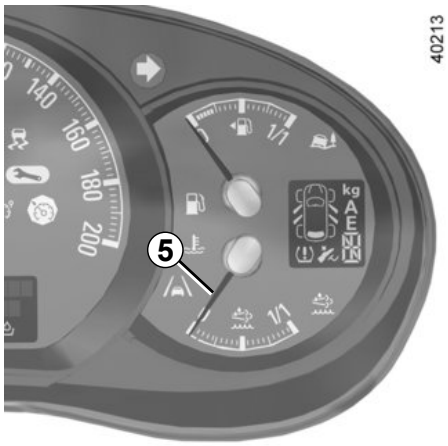

Additive level indicator *5*

The needle shows the additive level. When it is at the minimum level, the warning light comes on, accompanied by a beep.

Refer to the information on "Additive tank" in Section 1.

Downloaded from www.Manualslib.com manuals search engine

TRIP COMPUTER: general information (1/2)

Trip computer and warning system *A*

Depending on the vehicle, this includes the following functions:

– distance travelled;

– journey settings;

– information messages;

– operating fault messages (connected to the warning light);

– warning messages (connected to the STOP warning light);

– setting the time.

All these functions are described on the following pages.

Display selection keys *1* and *2*

Scroll through the following information upwards (button ***1***) or downwards (button ***2***) by pressing briefly and successively (the display depends on the vehicle equipment and country).

a) Total mileage and trip mileage recorder,

b) journey parameters:
   – fuel consumed;
   – average fuel consumption;
   – current fuel consumption;
   – estimated range;
   – distance travelled;
   – average speed;

c) distance before service;

d) Reset the tyre pressure

e) cruise control and speed limiter programmed speed;

f) trip log, operating faults and information message readout.

Downloaded from www.Manualslib.com manuals search engine

TRIP COMPUTER: general information (2/2)

Trip mileage resetting

With “trip mileage recorder” selected on the display, press button ***1* or *2*** until the mileage recorder resets to zero.

Resetting the journey parameters (reset button)

With one of the journey parameters selected on the display, press button ***1* or *2*** until the display resets.

Interpreting some of the values displayed after resetting

The values showing average fuel consumption, range and average speed will become more stable and reliable the further you travel after pressing the reset button.

For the first few miles after pressing the reset key you will notice that the range increases as you travel. This range takes into account the average fuel consumption since the last time the reset button was pressed. Therefore, the average fuel consumption may decrease when:

– the vehicle stops accelerating;

– the engine reaches its operating temperature (if the engine was cold when the reset key was pressed);

– when driving from an urban area onto the open road.

Automatic resetting of the journey parameters

Resetting occurs automatically when the maximum value of any of the parameters is exceeded.

Downloaded from www.Manualslib.com manuals search engine

TRIP COMPUTER AND WARNING SYSTEM: journey parameters (1/4)

The display of information shown below DEPENDS ON THE VEHICLE EQUIPMENT AND COUNTRY.

Examples of selections		Interpreting the display selected
37360 KM **7080 KM**	37360 KM 12:30 21°C 750.2 KM 12:30 21°C	**a) Total mileage and trip mileage recorder**
FUEL USED **26.0 L**		**b) Journey parameters** **Fuel consumed** since the last reset.
AVERAGE **7.3 L/100**	7.3 L/100 12:30 21°C	**Average fuel consumption** since the last reset. This value is displayed after driving 400 metres and takes into account the distance travelled and the fuel used since the last time the reset button was pressed.

Downloaded from www.Manualslib.com manuals search engine

TRIP COMPUTER: journey parameters (2/4)

The display of information shown below DEPENDS ON THE VEHICLE EQUIPMENT AND COUNTRY.

Examples of selections		Interpreting the display selected
CURRENT **8.6 L/100**	8.6 L/100 12:30 21°C	**Current fuel consumption** This value is displayed after a speed of approximately 20 mph (30 km/h) is reached.
RANGE **------ KM**	377.0 KM 12:30 21°C	**Estimated range with remaining fuel** This range takes into account the average fuel consumption since the last time the reset button was pressed. The value is displayed after driving 400 metres. Several minutes after the reserve light has come on (refer to the information on the “Instrument panel”), the estimated range will no longer be displayed.
DISTANCE **0.0 KM**	430.0 KM 12:30 21°C	**Distance travelled** since the last reset.
AVERAGE **109.2 KM/H**	87.2 KM/H 12:30 21°C	**Average speed** since the last reset. The value is displayed after driving 400 metres.

Downloaded from www.Manualslib.com manuals search engine

TRIP COMPUTER: journey parameters (3/4)

The display of information shown below DEPENDS ON THE VEHICLE EQUIPMENT AND COUNTRY.

Examples of selections		Interpreting the display selected
SERVICE IN **39624 KM**	1170.0 KM 12:30 21°C	**c) Mileage before service** Distance remaining until the next service (displayed in miles/kilometres), then when the service time nears, several scenarios are possible: – distance/time less than **1,800 miles** (3,000 km) or **two months:** depending on the vehicle, the message “SERVICE IN” is displayed; – distance/time remaining **0 miles** or **service date reached**: depending on the vehicle, the message “SERVICEPROMPTLY” is displayed when the selected display is “mileage before service”, accompanied by the symbol and the warning light. The vehicle requires a service as soon as possible.

NB: depending on the vehicle, the mileage before service changes according to the driving style (frequent driving at low speed, door-to-door journeys, extensive use at idle speed, towing a trailer etc.). The distance remaining until the next service can therefore decrease more quickly in some cases than the actual distance travelled.

The service intervals are independent of the vehicle’s maintenance schedule: please refer to your vehicle’s Maintenance Document.

Resetting: to reset the distance before service with the display selecting “service”, press and hold one of the display reset buttons for approximately 10 seconds until the display shows the mileage permanently.

Downloaded from www.Manualslib.com manuals search engine

TRIP COMPUTER: journey parameters (4/4)

The display of information shown below DEPENDS ON THE VEHICLE EQUIPMENT AND COUNTRY.

Examples of selections	Interpreting the display selected
TYRE PRESSURE ACQUISITION	**d) Reset the tyre pressures** Please refer to the information on the “Tyre pressure loss warning” in Section 2.
SPEED LIMITER **70 KM/H**	**e) Cruise control/speed limiter programmed speed** (depending on the vehicle) - please refer to the information on the «Cruise control - Speed limiter» in Section 2.
CRUISE CONTROL **70 KM/H**	
NO MESSAGE AVAILABLE	**f) Trip log** Successive display: – information messages (automatic lighting, etc.), – operating fault messages (Check injection system, etc.).

Downloaded from www.Manualslib.com manuals search engine

TRIP COMPUTER: information messages

These can help in the vehicle starting phase, or give information about a selection or a driving status.
Examples of information messages are given in the following pages.

Examples of messages	Interpretation of messages
TRACTION CONTROL OFF	Indicates that you have deactivated the traction control function.
BATTERY MODE: ECONOMY	Indicates that vehicle accessories have been switched off to preserve the battery.
OIL LEVEL CORRECT	Indicates that the oil level is correct when the ignition is switched on.

Downloaded from www.Manualslib.com manuals search engine

TRIP COMPUTER: operating fault messages

These appear with the warning light and mean that you should drive very carefully to an authorised dealer as soon as possible. If you fail to follow this recommendation, you risk damaging your vehicle.

They disappear when the display selection key is pressed or after several seconds and are stored in the computer log. The warning light stays on. Examples of operating fault messages are given on the following pages.

Examples of messages	Interpretation of messages
CHECK ESC	Indicates a fault in the traction control system or in the Electronic Stability Program system (please refer to the information on “Driver correction devices and aids” in Section 2).
CHECK FUEL FILTER	Indicates that there is water present in the diesel fuel. Contact an approved Dealer as soon as possible.
CHECK GEARBOX	Indicates that a fault has occurred in the gearbox; contact an approved Dealer as soon as possible.
CHECK AUTO LIGHTS	Indicates an automatic lighting operating fault; contact an approved Dealer.
CHECK ANTI- POLLUTION	– Indicates a fault in the vehicle’s emission control system. – Indicates a fault in the emissions reduction system when it is accompanied by the warning light. Refer to the information on “Additive tank” in Section 1.

Downloaded from www.Manualslib.com manuals search engine

TRIP COMPUTER: warning messages

These appear with the STOP warning light and require you to stop immediately, for your own safety, as soon as traffic conditions allow. Stop your engine and do not restart it. Contact an approved Dealer.

Examples of warning messages are given in the following pages. **Note:** the messages appear on the display either individually or alternately (when there are several messages to be displayed), and may be accompanied by a warning light and/or a beep.

Examples of messages	Interpretation of messages
INJECTION FAULT	Indicates that the vehicle has a serious engine fault.
ENGINE OVERHEATING	Indicates that the engine is overheating.
GEARBOX OVERHEATING	Indicates that the gearbox is overheating.
TYRE PUNCTURE	Indicates that at least one wheel is punctured or severely underinflated.

Downloaded from www.Manualslib.com manuals search engine

STEERING WHEEL/POWER-ASSISTED STEERING

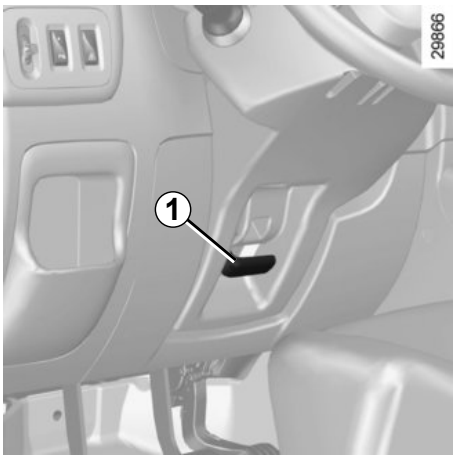

Steering wheel height adjustment

Pull lever ***1*** and move the steering wheel to the required position.

Then, push the lever back fully, beyond the point of resistance to lock the steering wheel.

Make sure that the steering wheel is correctly locked.

For safety reasons, only adjust the steering wheel when the vehicle is stationary.

Power-assisted steering

With the engine running, do not leave the steering wheel at full lock while stationary as this may damage the power-assisted steering pump.

With the engine switched off, or if there is a system fault, it is still possible to turn the steering wheel. The force required will be greater.

Engine on standby - power-assisted steering is no longer operational.

Never switch off the ignition when travelling downhill, and avoid doing so in normal driving (assistance is not provided).

Downloaded from www.Manualslib.com manuals search engine

CLOCK AND EXTERIOR TEMPERATURE

With the ignition on, the time and, depending on the vehicle, the exterior temperature, are displayed on the on-board computer ***A***.

Setting clock *A*

Display the “clock” page on the instrument panel by pressing one of the buttons on stalk ***1***.

After 2 seconds, the hours and minutes start flashing.

Press and hold the bottom button to enter the hour setting mode. When they flash on their own, press the top button to scroll through them.

Press and hold the bottom button to enter the minute setting mode. When they flash on their own, press the top button to scroll through them.

Confirm by pressing and holding the bottom button on stalk ***1***.

Exterior temperature

When the temperature is between –3°C and +3°C, the **°C** characters flash (indicates risk of ice formation).

If the electrical supply is cut (battery disconnected, broken supply wire, etc.), the clock will lose its time setting. The time must then be set.

For safety reasons, carry out any adjustments when the vehicle is not being driven.

Exterior temperature indicator

As ice formation is related to climatic exposure, local air humidity and temperature, the external temperature alone is not sufficient to detect ice.

Downloaded from www.Manualslib.com manuals search engine

SCREEN WASHER/WIPER (1/2)

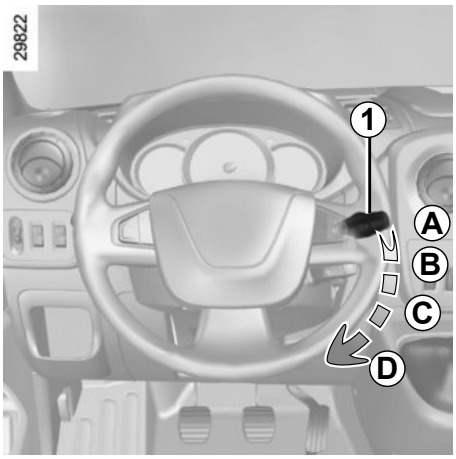

Vehicle fitted with intermittent windscreen wipers

A **park**

B **intermittent wiping**
The wipers will pause for several seconds between sweeps. It is possible to change the time between sweeps by turning ring ***2***.

C **normal wiping speed**

D **fast wiping speed**

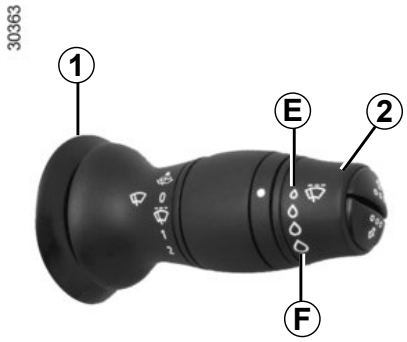

Special note

When driving the vehicle, the wiping speed slows down whenever the vehicle stops. For example, fast wiping speed will slow to normal wiping speed. As soon as the vehicle moves off, wiping will return to the speed originally selected.
If stalk ***1*** is operated, it overrides and cancels the automatic function.

Note: in the event of mechanical seizure, the system automatically cuts the power supply to the wipers.

Vehicle fitted with windscreen wiper rain sensor

A **park**

B **automatic wiper function.**
When this position is selected, the system detects water on the windscreen and triggers the wipers at a suitable wiping speed. It is possible to change the triggering threshold and the time sweeps by turning ring ***2***:

– ***E***: minimum sensitivity

– ***F***: maximum sensitivity

note: in foggy weather or during snowfalls, the wiping is not automatically triggered and remains under the driver's control.

C **normal wiping speed**

D **fast wiping speed**

Downloaded from www.Manualslib.com manuals search engine

SCREEN WASHER/WIPER (2/2)

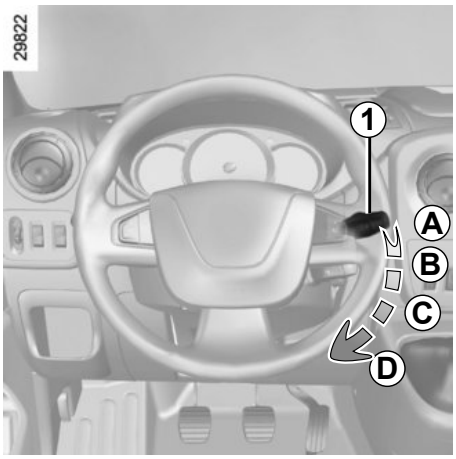

Windscreen washer

With the ignition on, pull stalk ***1*** then release.

A brief pull will trigger a single sweep of the wipers, in addition to the windscreen washer.

A longer pull will trigger three sweeps of the wipers followed, a few seconds later, by a fourth, in addition to the windscreen washer.

In snowy or icy conditions, make sure the wiper blades are not stuck by ice.

Keep an eye on the condition of the blades. Replace the wiper blades as soon as they begin to lose efficiency (approximately once a year).

When working in the engine compartment, ensure that the windscreen wiper stalk is in position ***A*** (park).

Risk of injury.

Before any action involving the windscreen (washing the vehicle, de-icing, cleaning the windscreen, etc.) return stalk ***1*** to position **A** (park).

Risk of injury and/or damage.

Downloaded from www.Manualslib.com manuals search engine

EXTERIOR LIGHTING AND SIGNALS (1/5)

Side lights

Turn ring ***3*** until the symbol is opposite mark ***2***.

The instrument panel will light up.

Side position lights

(depending on the vehicle)

These draw other road users' attention to the width of the vehicle.

They come on when the side lights are switched on.

Dipped beam headlights

Manual operation

Turn ring ***3*** until the symbol is opposite mark ***2***. This indicator light on the instrument panel comes on.

Automatic operation

(depending on vehicle)

Turn ring ***3*** until the AUTO symbol is opposite mark ***2***: with the engine running, the dipped beam headlights switch on or off automatically depending on the brightness of the light outside, without any action on stalk ***1***.

If the vehicle is parked on the hard shoulder with tailgate open, the rear lights may be obscured. You should make other road users aware of your vehicle by using a warning triangle or other equipment specified by the road traffic regulations of the country you are driving in.

Before driving at night, check that the electrical equipment is operating correctly and adjust the headlight beams (if your vehicle is not carrying its normal load). In general, check that the lights are not obscured (by dirt, mud, snow or objects which could cover them).

Downloaded from www.Manualslib.com manuals search engine

EXTERIOR LIGHTING AND SIGNALS (2/5)

Cornering lights

Depending on the vehicle, if the dipped beam headlights are on when cornering, and under certain driving conditions (speed, steering wheel angle, forwards gear selected, etc.), additional lights are switched on to light the inside of the bend.

Note: under certain conditions of prolonged use, this system will be switched off automatically as it is intended for use over limited periods.

"See-me-home lighting" function

This function allows you to briefly switch on the dipped beam headlights (to provide light when opening a gate, etc.).

With the engine and lights off, and ring ***3*** in position **0**, pull stalk ***1*** towards you: the dipped beam headlights come on for approximately one minute. To increase this duration, you may pull the stalk up to four times (total time limited to two minutes). To switch off the lights before they go out automatically, turn ring ***3*** to any position, then return it to position **0**.

Main beam headlights

With stalk ***1*** in dipped beam headlights position, move the stalk towards you.

When the main beam headlights are lit up, an indicator light on the instrument panel lights up.

To return to the dipped headlight position, pull stalk ***1*** towards you again.

Downloaded from www.Manualslib.com manuals search engine

Automatic main beam headlights

Depending on the vehicle, this system switches the main beam headlights on and off automatically. The function uses a camera located behind the interior rear-view mirror to detect vehicles that are following and coming in the opposite direction.

The main beam headlights come on automatically if:
- exterior light is weak;
- no other vehicles or lighting are detected;
- the vehicle speed is above approximately 30 mph (45 km/h).

If any of the above conditions are not fulfilled, the system switches to dipped beam headlights.

The "automatic main beam headlights" system should under no circumstances be used to replace driver attention and responsibility with regard to vehicle lighting and adapting to light, visibility and traffic conditions.

The system may encounter difficulties under certain conditions, including:
- extreme weather conditions (rain, snow, fog, etc.);
- obstruction in front of the windscreen or camera;
- when a following or oncoming vehicle has weak or hidden lighting;
- incorrect settings for the front headlights;
- reflective systems;
- ...

Activation

Turn ring ***3*** until the AUTO symbol is opposite mark ***2***.

Pull stalk ***1*** to activate main beam headlights. Warning light comes on the instrument panel.

Deactivation
- Pull stalk ***1*** again;
- or turn ring ***3*** to a position other than AUTO.

Warning light goes out on the instrument panel.

Using the portable navigation system at night in the windscreen area below the camera may disturb the operation of the "automatic main beam headlights" system (risk of reflection on the windscreen).

Downloaded from www.Manualslib.com manuals search engine

EXTERIOR LIGHTING AND SIGNALS (4/5)

Front fog lights

Turn the centre ring ***4*** of the stalk until the symbol is opposite mark ***5***.

The front fog lights only work if the exterior lights have been activated. An indicator light on the instrument panel will come on.

Rear fog lights

Turn the centre ring ***4*** of the stalk until the symbol is opposite mark ***5***.

The rear fog lights only work if the exterior lights have been activated. An indicator light on the instrument panel will come on.

Do not forget to switch off the fog lights when they are no longer needed, to avoid inconveniencing other road users.

When the exterior vehicle lights are switched off, the rear fog lights switch off or the equipment returns to the front fog lights position (if they are fitted).

Switching off the lights

There are two possibilities:

– Manually, move ring ***3*** to position **0**;
– automatically, the lights will go out when the engine is switched off, the driver's door is opened or the vehicle is locked. In this case, the next time the engine is started the lights will be switched back on according to the position of the ring ***3***.

Lights-on warning buzzer

A warning buzzer will sound when the driver's door is opened and the lights have been left switched on after the ignition has been switched off (to prevent discharge of the battery).

Downloaded from www.Manualslib.com manuals search engine

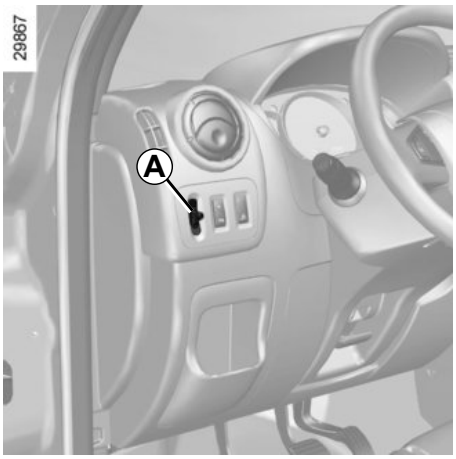

Electric beam height adjustment

Control ***A*** allows you to adjust the height of the headlight beams.

Turn control ***A*** to adjust the headlights according to the load.

This control only works when the lighting is in dipped beam headlight position.

Load status	Control position
Empty, driver only	**0**
Driver with passenger(s) and luggage compartment full (1)	**2**
Other cases	According to driver's judgement

(1) Load status at maximum permitted weight.

Downloaded from www.Manualslib.com manuals search engine

AUDIBLE AND VISUAL SIGNALS

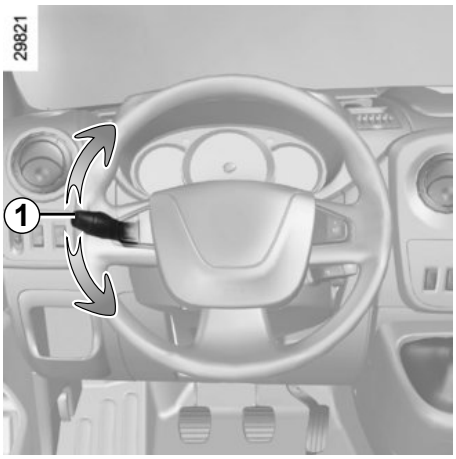

Direction indicators

Move stalk ***1*** parallel to the steering wheel and in the direction you are going to turn it.

When driving on the motorway, the steering wheel is not usually turned sufficiently to return the stalk automatically to its starting position.

There is an intermediate position in which you should keep the stalk when the steering wheel is moved.

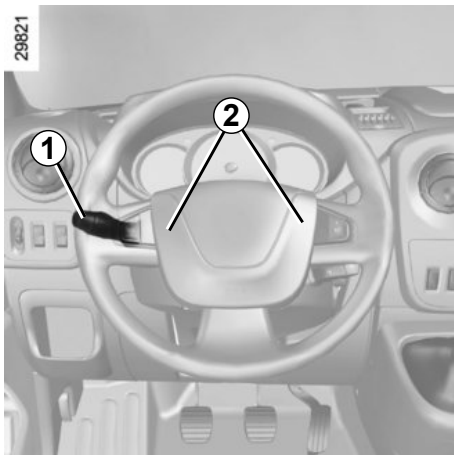

You can also briefly place stalk ***1*** in the intermediate position, causing the indicator light to flash three times.

When the stalk is released, it will automatically return to its starting position.

Horn

Press on the sides ***2*** of the steering wheel boss.

Headlight flasher

Pull stalk ***1*** towards you to flash the headlights.

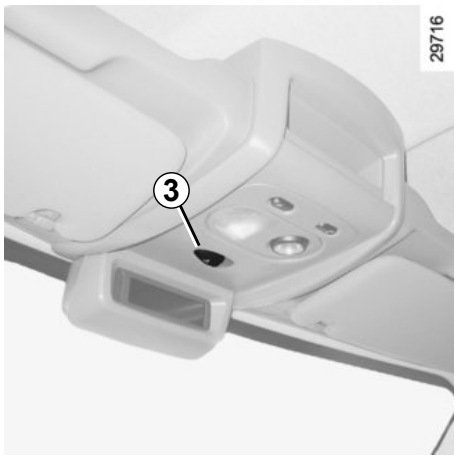

Hazard warning lights

Press switch ***3***. This switch activates all four direction indicators and the side indicator lights simultaneously. It must only be used in an emergency to warn drivers of other vehicles that you have had to stop in an area where stopping is prohibited or unexpected, or that you are obliged to drive under special conditions.

Depending on the vehicle, the hazard warning lights may come on automatically under heavy deceleration. You can switch them off by pressing switch ***3***.

Downloaded from www.Manualslib.com manuals search engine

FUEL TANK (1/2)

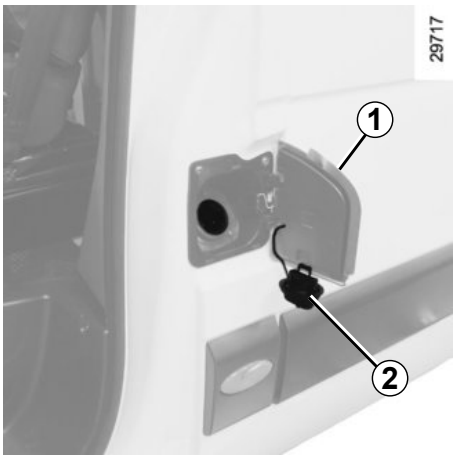

Filling the tank

Open the driver's door in order to open flap ***1***.

Depending on the vehicle, unlock cap ***2*** using the key.

Remove cap ***2*** and attach it to flap ***1***.

Useful capacity of fuel tank: approximately 105 litres or 80 litres (depending on the vehicle).

Filling with fuel

When the pump cuts out automatically at the end of the filling procedure, a maximum of two further filling attempts may be made to maintain an expansion volume.

Fuel grade

It is **essential** to use diesel. Make sure that no water accidentally enters the fuel tank during filling. The shut-off system and its surrounding area must be dust-free. The diesel fuel must be of a high grade.

After filling, check that the cap and cover are closed.

Do not mix even small amounts of petrol (unleaded or E85) with diesel.

Do not add additive to the fuel – otherwise you risk damaging the engine.

Vehicle fitted with the Stop and Start function

To fill up with fuel, the engine must be stopped (and not on standby): stop the engine (please refer to the information on "Starting and stopping the engine" in Section 2).

Fuel filler cap: this is of a special type.

If you have to replace it, make sure it is identical to the original cap. Contact an approved Dealer.
Never place the cap near a source of heat or flame.

Do not wash the filler area with a high-pressure washer.

Downloaded from www.Manualslib.com manuals search engine

Running out of fuel on diesel versions

After a breakdown caused by completely running out of fuel, the system must be reprimed before the engine is restarted:
Fill the tank on level ground with a minimum of 5 litres of diesel.

Press priming bulb ***3*** several times.

The engine can now be restarted.
If the engine does not start after several attempts, contact an approved Dealer.

Persistent smell of fuel

If you notice a persistent smell of fuel you should:

– stop the vehicle as soon as traffic conditions allow and switch off the ignition;

– switch on the hazard warning lights and ask your passengers to leave the vehicle and to keep away from traffic;

– contact an approved Dealer.

No modifications whatsoever are permitted on any part of the fuel supply system (computers, wiring, fuel circuit, injector, protection covers, etc.) as this may be dangerous (such work must be undertaken by qualified Network personnel).

Downloaded from www.Manualslib.com manuals search engine

ADDITIVE TANK (1/6)

Please ensure that you comply with the legislation of your country.

It is important to remember that failure to respect regulations in force could lead to legal action being taken against the vehicle owner.

Operating principle

The use of additives reduces exhaust emissions by transforming the pollutants into water vapour and nitrogen.

Topping up

Capacity of the fuel tank: 20 litres approximately.
Open the front passenger door to open the cover ***2***. Unscrew the cap ***1***.

Fuel filler cap: this is specific.
If you have to replace it, make sure it is identical to the original cap. Contact an approved Dealer. Do not wash the filler area with a high pressure washer.

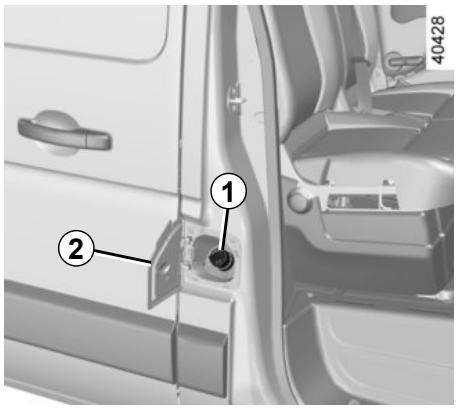

Vehicle fitted with the Stop and Start function
To fill up with additive, the engine must be stopped (and not on standby): stop the engine (Please See “Starting, stopping the engine” in Section 2).

No work whatsoever is permitted on any part of the system. To prevent damage, only qualified personnel from our network may work on the system.

If the warning “XXX KM STOP ADD ADBLUE” appears, fill the additive tank (minimum 2.2 gallons [10 litres]) and refer to the filling instructions.
Risk of immobilisation of the vehicle.

Topping up

After filling the additive tank, check that the cap and cover are closed, start the engine and **IMPERATIVELY wait for 10 seconds with the vehicle stationary, engine running** before setting off again.
If this operation is not carried out, the filling of the tank will only be taken into account automatically after at least several dozens of minutes of driving.
The message “--- ADD ADBLUE” and/or the warning lights will continue to appear until the filling has been taken into account by the system.

Downloaded from www.Manualslib.com manuals search engine

ADDITIVE TANK (2/6)

Additive quality

Use **only additives which conform to standard ISO 22241** and in accordance with the label on the fuel filler flap.

Average fuel consumption

Approximately 810 mpg (3.5 L/1,000 km) depending on the vehicle and the driving style.

Precautions for use

Always read the information on the additive can.

Handle additives with care. They can damage clothes, shoes, bodywork components etc.

If the additive overflows, or contaminates any paintwork, clean the affected area quickly with a damp cloth.

In extreme cold weather conditions
The vehicle is fitted with a system for reheating the additive fluid that enables you to drive in extreme cold weather conditions.

Precautions when filling the tank
The additive fluid freezes below about -10°C.
In this case, do not attempt filling when the fluid is frozen.
It is therefore advisable to top up the additive fluid or have it topped up by a qualified professional as soon as the warning light on the instrument panel first comes on.

The additive must not come into contact with eyes or skin. If it does, wash the affected area with plenty of cold water. If necessary, consult a doctor.

Downloaded from www.Manualslib.com manuals search engine

ADDITIVE TANK (3/6)

Alert with message on the instrument panel on display *3*
(depending on vehicle)

Maintenance/Range
When the indicator lights described light up, this may be accompanied by a beep.

Indicator lights	Message	What to do?
comes on each time the vehicle is started.	"LEVEL ADBLUE LOW"	Fill or have an Approved Dealer fill or top up the additive tank.
comes on.	"TOP UP ADBLUE"	
comes on.	"XXX KM STOP ADD ADBLUE"	Fill or have an Approved Dealer fill or top up the tank with at least 2.2 gallons (10 litres) of additive as soon as possible.
comes on.	"0 KM STOP ADD ADBLUE	**The engine will not start.** To restart, you must yourself add at least 2.2 gallons (10 litres) of additive to the tank.

Downloaded from www.Manualslib.com manuals search engine

ADDITIVE TANK (4/6)

System fault
When the indicator lights described light up, this may be accompanied by a beep.

Indicator lights	Message	Readings
and come on.	« CHECK ANTI- - POLLUTION SYSTEM »	Indicates a fault in the system. Contact your approved dealer as soon as possible.
and come on.	“ANTIPOLLUTION xxx KM FAIL”	Indicates that **in less than 680 miles (1100 km) it will become impossible to restart the vehicle**. These warnings will be repeated every 60 miles (100 km). Contact your approved dealer as soon as possible.
and come on.	“ANTIPOLLUTION 0 KM FAILURE”	Indicates that after the ignition is switched off **the vehicle will not restart**. Call an approved Dealer.

Downloaded from www.Manualslib.com manuals search engine

ADDITIVE TANK (5/6)

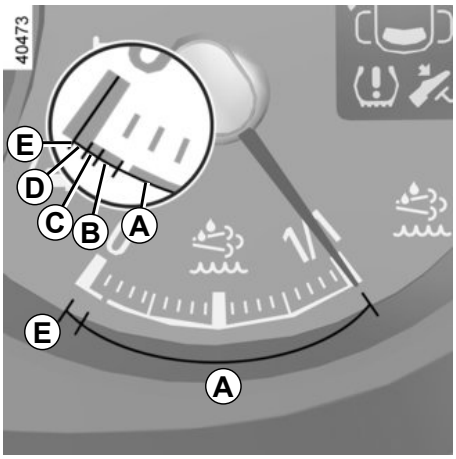

Alert with no message on the instrument panel
(depending on vehicle)

Maintenance/Range

Gauge level	Warnings	What to do?
Range ***A***	–	–
Range ***B***	comes on.	Fill or have an Approved Dealer fill or top up the additive tank.
Range ***C***	flashes for a few seconds at the start of the warning and each time the ignition is switched on, then stays on.	
Range ***D***	flashes for a few seconds at the start of the warning and each time the ignition is switched on, then stays on. It is accompanied by beeps.	**Loss of engine power.** Fill or have an Approved Dealer fill or top up the tank with at least 2.2 gallons (10 litres) of additive as soon as possible.
At ***E***	**Empty tank.** flashes accompanied by beeps and the message “CHECK ANTI- - POLLUTION”.	In this case, the next time the engine is stopped/started, **the speed of the vehicle is limited to approximately 12.4 mph (20 km/h)** until you or an Approved Dealer fill or top up the tank with at least 2.2 gallons (10 litres) of additive.

Downloaded from www.Manualslib.com manuals search engine

ADDITIVE TANK (6/6)

System fault
When the indicator lights described light up, this may be accompanied by a beep.

Indicator lights	Readings
and come on.	Indicates a fault in the system. Contact your approved dealer as soon as possible.
and flash when the engine is started then stay lit.	Indicates a system fault with **a loss of engine power**. Contact your approved dealer as soon as possible.
and flash.	Indicates a fault in the system. In this case, at the next engine stop/start, **the vehicle speed is limited to approximately 12 mph (20 km/h)**. Contact your approved dealer as soon as possible.

Downloaded from www.Manualslib.com manuals search engine

Section 2: Driving

(advice on use relating to fuel economy and the environment)

Running in, ignition switch 2.2
Starting, stopping the engine 2.3
Stop and Start Function 2.4
Special features of diesel versions 2.7
Driving advice, Eco-driving 2.8
Maintenance and antipollution advice 2.12
Environment 2.13
Gear lever 2.14
Handbrake 2.15
Driver correction devices/aids 2.16
Tyre pressure loss warning 2.21
Lane departure warning 2.24
Speed limiter 2.26
Cruise control 2.29
Overspeed function 2.33
Parking distance control 2.34
Reversing camera 2.36
Power take-off 2.38
Fast idle speed 2.39
Self-locking differential 2.40
Sequential gearbox 2.41

Downloaded from www.Manualslib.com manuals search engine

RUNNING IN, IGNITION SWITCH

Up to **900 miles (1,500 km)**, do not exceed 2,500 rpm or approximately 54 mph (90 km/h) in the highest gear. After completing this mileage you may drive faster, although you may only expect top performance after approximately 3,600 miles (6,000 km).

During the running in period, do not accelerate hard while the engine is still cold and do not let the engine over-rev.

Service intervals: refer to the Maintenance Document for the vehicle.

Ignition switch

Stop and steering lock position St
To lock: remove the key and turn the steering wheel until the steering column locks.
To unlock: turn the key and the steering wheel slightly.

Accessories position A
When the ignition is switched off, any accessories (radio, etc.) will continue to function.

Ignition on position M
With the ignition on, the engine will be preheating.

Start position D
If the engine fails to start at the first attempt, turn the key back before activating the starter again. Release the key as soon as the engine starts.

Note: several seconds may pass between turning the key and the engine starting to allow for engine preheating.

Special note on vehicles with a sequential gearbox
Depress the brake pedal with the lever in the **N** position.

Note: If a gear other than neutral is displayed, it flashes; starting is not possible unless you depress the brake pedal, while holding the key in the starting position.

In the “Accessories” or “On” position, a system may automatically switch off your vehicle’s accessories depending on the battery charge, to prevent it from discharging completely.

Downloaded from www.Manualslib.com manuals search engine

STARTING/STOPPING THE ENGINE

Starting the engine

Turn the ignition key to the “Ignition on” position **M** and hold this position until the engine preheating warning light goes out.

> Never start your vehicle while freewheeling on a gradient. **Risk of non-activation of power-assisted steering.**
> **There is a risk of accidents.**

Depending on the vehicle, if a gear is engaged, the message “Depress clutch + start” is displayed on the instrument panel. Press the clutch pedal.

Turn the key to starter position **D without depressing the accelerator pedal**.

Release the key as soon as the engine starts.

> **Starting the vehicle**
>
> For rear-wheel drive versions on level ground, with the vehicle unladen, we recommend that you start in second gear.

> Never switch off the ignition before the vehicle has stopped completely. Once the engine has stopped, the brake servo, power-assisted steering, etc. and the passive safety devices such as air bags and pretensioners will no longer operate.

Stopping the engine

With the engine idling, turn the key to the “Stop” position **St**.

> **Driver’s responsibility when parking or stopping the vehicle**
>
> Never leave an animal, child or adult who is not self-sufficient alone in your vehicle, even for a short time.
>
> They may pose a risk to themselves or to others by starting the engine, activating equipment such as the electric windows or locking the doors, for example.
>
> Also, in hot and/or sunny weather, please remember that the temperature inside the passenger compartment increases very quickly.
>
> **RISK OF DEATH OR SERIOUS INJURY**.

Downloaded from www.Manualslib.com manuals search engine

STOP AND START FUNCTION (1/3)

This system enables a reduced fuel consumption and lower greenhouse gas emissions.
The system is activated automatically when the vehicle is started.
While driving, the system stops the engine (standby) when the vehicle is at a standstill (traffic jam, traffic lights, etc).

Conditions for engine standby

The vehicle has set off from where it was parked;

For sequential gearbox:
– the gearbox is in position A,, M or N;
and
– the brake pedal is depressed (sufficiently hard);
and
– the accelerator pedal is not depressed;
and
– the speed is zero for around 1 second.
The engine remains on standby if position P is selected, or if position N is selected with the handbrake engaged and the brake pedal released.

For manual gearboxes:
– the gearbox is in neutral;
and
– the clutch pedal is released.

If warning light flashes, this means that the clutch pedal is not sufficiently released.
and
– the vehicle speed is less than approximately 7 mph (3 km/h).

The engine will restart when you press the clutch pedal and move into gear.

For all vehicles:

Warning light on the instrument panel is lit when the engine is on standby.
The vehicle equipment remain operational while the engine is stopped.

If the engine stalls while the system is in operation, pressing the clutch pedal right down will start it again.

If you get out of the vehicle, a beep notifies you that the engine is on standby and has not been switched off.

Before getting out of the vehicle, you must switch off the ignition (please see section on “Starting, stopping the engine”).

Do not drive off when the engine is on standby (warning light is displayed on the instrument panel).

Engine on standby - braking assistance is no longer operational.

Downloaded from www.Manualslib.com manuals search engine

STOP AND START FUNCTION (2/3)

Preventing the engine from standing by

In certain situations, such as negotiating a crossroads for instance, it is possible (with the system activated) to keep the engine running so as to be ready to move off quickly.

Sequential gearbox:

keep the vehicle stationary without pressing too hard on the brake pedal.

Manual gearbox:

keep the clutch pedal pressed right down.

To fill up with fuel, the engine must be stopped (and not on standby): always stop the engine (please see “Starting, stopping the engine”).

Conditions for coming out of engine standby

For sequential gearbox:

– the brake pedal is released, position A or M engaged or,
– the brake pedal is released, position N engaged and the handbrake off, or
– the brake pedal is pressed again, with position P engaged or position N engaged with the handbrake applied, or
– position R is engaged or,
– the accelerator pedal is pressed.

For manual gearboxes:

– the gearbox is in neutral and the clutch pedal is slightly depressed, or
– the engine is in gear and the clutch pedal is pressed right down.

Conditions preventing the standby of the engine

Certain conditions prevent the system from using the engine standby function, including when:

– reverse gear is engaged;
– the bonnet is not locked;
– the outdoor temperature is too low or too high (less than around 0 °C or higher than around 30 °C);
– the battery is not sufficiently charged;
– the difference between the vehicle interior temperature and the automatic climate control instruction is too high;
– the “Clear View” function is activated (please see “Automatic Climate Control” in Section 3);
– the engine coolant temperature is too low;
– automatic particle filter cleaning is underway;

or

– ...

Warning light is displayed on the instrument panel. This notifies you that the engine is on standby.

Downloaded from www.Manualslib.com manuals search engine

STOP AND START FUNCTION (3/3)

Special feature of the automatic engine re-start

Under certain conditions, the engine can restart on its own in order to guarantee your safety and comfort.

This can occur especially when:

– the outdoor temperature is too low or too high (less than around 0 °C or higher than around 30 °C);
– the “Clear View” function is activated (please see “Automatic Climate Control” in Section 3);
– the battery is not sufficiently charged;
– the vehicle speed is above 7 km/h (downhill slope, etc.);
– repeated pressing on the brake pedal or braking system requirement;
– ...

Deactivating, activating the function

Press ***1*** to deactivate the function. Warning light ***2*** in the switch lights up.

Pressing this again will reactivate the system. Warning light ***2*** in switch ***1*** goes out.

The system is automatically reactivated each time the vehicle is started (please see section on “Starting, stopping the engine”).

Before getting out of the vehicle, you must switch off the ignition (please see section on “Starting, stopping the engine”).

Downloaded from www.Manualslib.com manuals search engine

SPECIAL FEATURES OF DIESEL VERSIONS

Diesel engine speed

Diesel engines are fitted with an injection pump with an electronic regulator **which prevents overrevving of the engine** irrespective of the gear engaged.

If the and warning lights come on, consult an approved dealer as soon as possible.

When driving, depending on the fuel grade used, it is possible that white smoke may be emitted.
This is due to the exhaust particle filter being cleaned automatically, and does not affect the way the vehicle runs.

Running out of fuel

You may start the engine normally after refilling the fuel tank **even if you have completely run out of fuel**, provided that the battery is fully charged.
However, if the engine does not start after a few seconds and several attempts, refer to the information on the "Fuel tank" in Section 1.

Precautions to be taken in winter

To avoid any faults in icy weather:
– make sure that the battery is always fully charged;
– always keep the diesel tank relatively full to prevent water vapour condensing in it and accumulating at the bottom of the tank.

Do not park the vehicle or run the engine in locations where combustible substances or materials such as grass or leaves can come into contact with the hot exhaust system.

Downloaded from www.Manualslib.com manuals search engine

DRIVING ADVICE, ECO-DRIVING (1/4)

Fuel consumption is accredited in accordance with a standard regulatory method. Identical for all manufacturers, this enables vehicles to be compared with one another. Consumption in real time depends on vehicle usage conditions, the equipment fitted and the user's driving style. To optimise fuel consumption, please refer to the following advice.

Depending on the vehicle, you will have various functions which enable you to lower your fuel consumption:

- the rev counter;
- gear change indicator;
- the journey record and eco-driving advice via the multimedia display;
- ECO mode – activated by the ECO button.

If fitted on the vehicle, the navigation system provides additional information.

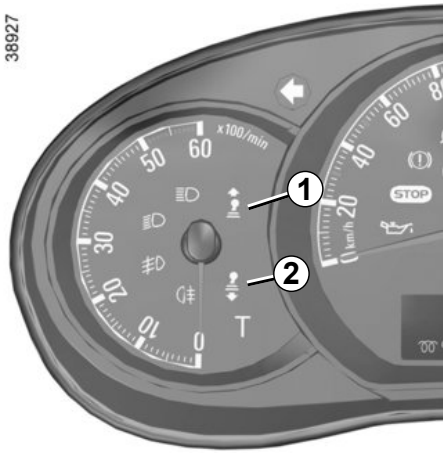

Gear change indicator *1* and *2*

(depending on vehicle)

To obtain optimum consumption levels, a warning light on the instrument panel lets you know the best time to move up a gear, or down a gear for vehicles where this is fitted:

move up a gear;

move down a gear.

Downloaded from www.Manualslib.com manuals search engine

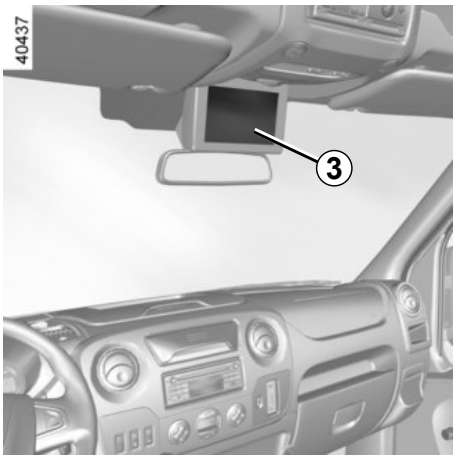

Journey record

Once the engine is switched off, you will see “Journey record” displayed on the screen ***3***, enabling you to view information relating to your last journey.

This indicates:
– average fuel consumption;
– number of miles/kilometres travelled;
– number of miles/kilometres saved.

An overall rating from 0 to 100 is displayed to let you assess your eco driving performance. The higher the rating, the lower the fuel consumption.
Eco advice is given to help improve your performance.
With your favourite journeys saved, you can evaluate your performance.
For more information, please see the multimedia system instructions.

ECO mode

ECO mode is a function which optimises fuel consumption. It acts on certain power consuming systems in the vehicle (heating, air conditioning, power-assisted steering, etc.) and on certain driving actions (acceleration, gear changing, cruise control, deceleration, etc.).

Activating the function

Press switch ***4***.

The warning light in the ***4*** switch lights up.

While driving, it is possible to leave the ECO mode temporarily in order to improve engine performance.

Depress the accelerator pedal firmly and fully.

ECO mode is reactivated when you take pressure off the accelerator pedal.

Disabling the function

Press switch ***4***.

The indicator light in the switch ***4*** goes out.

Downloaded from www.Manualslib.com manuals search engine

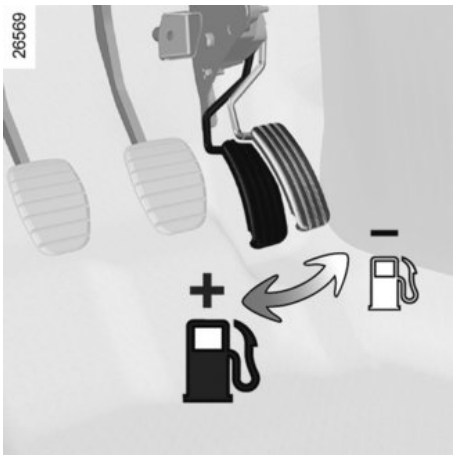

Driving advice, Eco-driving

Behaviour

- Drive carefully for the first few miles until the engine reaches its normal operating temperature, rather than let it warm up while the vehicle is stationary.
- Speed is expensive.
- Sporty driving uses a lot of fuel: drive with a light right foot.
- Do not overrev the engine in the intermediate gears.
  You should always use the highest gear possible.
- Avoid sudden acceleration.
- Brake as little as possible. If you anticipate an obstacle or bend in advance, you may then simply release the accelerator pedal.
- Do not try to maintain the same speed up a hill, accelerate no more than you would on the level. Keep your foot in the same position on the accelerator pedal.
- Double declutching and accelerating before switching off are unnecessary in modern vehicles.
- Bad weather, flooded roads:

Do not drive through floods if the water is above the lower edge of the wheel rims.

Obstructions to the driver
On the driver's side, only use mats suitable for the vehicle, attached with the pre-fitted components, and check the fitting regularly. Do not lay one mat on top of another.
There is a risk of wedging the pedals

Downloaded from www.Manualslib.com manuals search engine

DRIVING ADVICE, ECO-DRIVING (4/4)

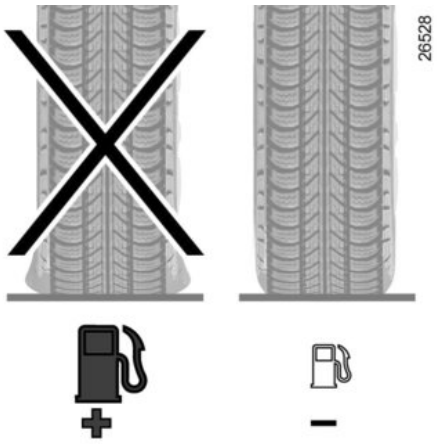

Tyres

– An underinflated tyre increases fuel consumption.
– The use of non-recommended tyres can increase fuel consumption.

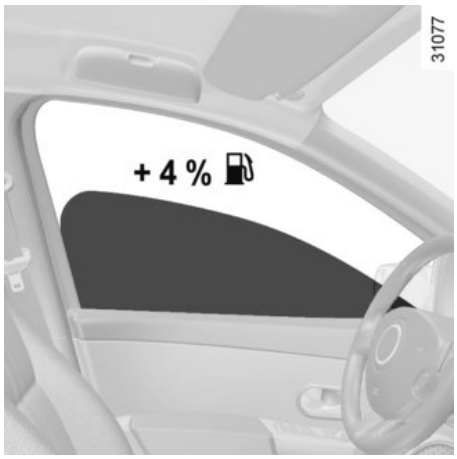

Advice on use

– Favour ECO mode.
– Electricity is fuel; switch off all the electrical components which are not really needed. **However** (safety first), keep your lights on when the visibility is bad (“see and be seen”).
– Use the air vents. Driving with the windows open at 60 mph (100 km/h) will increase fuel consumption by 4%.
– Never fill the fuel tank right to the brim to avoid overflow.
– **In vehicles fitted with air conditioning,** it is normal to observe an increase in fuel consumption (especially in urban conditions) when it is used. For vehicles fitted with manual air conditioning, switch off the system when it is not required.

Advice for reducing consumption and therefore helping to preserve the environment:

If the vehicle has been parked in the sun, open the doors for a few moments to let the hot air escape before starting the engine.
– Do not leave an empty roof rack fitted to the vehicle.
– When towing a caravan, fit a wind deflector and adjust it carefully.

Downloaded from www.Manualslib.com manuals search engine

MAINTENANCE AND ANTIPOLLUTION ADVICE

Your vehicle complies with criteria for recycling and recovering vehicles at the end of their service life which will come into force in 2015.

Some parts of your vehicle have therefore been designed to facilitate future recycling.

These parts are easy to remove so that they can be recovered and reprocessed by recycling companies.

By virtue of its design, moderate fuel consumption and initial settings, your vehicle also conforms to current antipollution regulations. The manufacturer is actively striving to reduce pollutant exhaust gas emissions and to save energy. But the fuel consumption of your vehicle and the level of pollutant exhaust gas emissions are also your responsibility. Ensure that it is maintained and used correctly.

Maintenance

It is important to remember that failure to respect antipollution regulations could lead to legal action being taken against the vehicle owner. In addition, replacing engine, fuel supply system and exhaust components with parts other than those originally recommended by the manufacturer may alter your vehicle so that it no longer complies with antipollution regulations.

Have your vehicle adjusted and checked by an approved Dealer, in accordance with the instructions given in your maintenance schedule: they will have all the equipment necessary for ensuring that your vehicle is maintained to its original standard.

Engine adjustments

– **Air filter, diesel filter:** a choked element will reduce efficiency. It must be replaced.

– **Idle speed:** this does not require adjustment.

Exhaust gas monitoring system

The exhaust gas monitoring system will detect any operating faults in the vehicle's antipollution system.
If this system malfunctions, toxic substances may be released into the atmosphere or damage may occur.

This warning light on the instrument panel will indicate if there are any faults in the system:
This lights up when the ignition is switched on and goes out when the engine is started.

– If it lights up continuously, consult an approved Dealer as soon as possible;
– if it flashes, reduce the engine speed until the light stops flashing. Contact your approved dealer as soon as possible.

Refer to the information on «Additive tank» in Section 1.

Downloaded from www.Manualslib.com manuals search engine

ENVIRONMENT

Your vehicle has been designed with respect for the **environment** in mind for its entire service life: during production, use and at the end of its life.
This commitment is illustrated by the of the manufacturer eco² signature.

Manufacture

Your vehicle has been manufactured at a factory which complies with a policy to reduce the environmental impact on the surrounding areas (reduction of water and energy consumption, visual and noise pollution, atmospheric emissions and waste water; sorting and re-using waste).

Emissions

Your vehicle has been designed to emit fewer greenhouse gases (CO2) while in use, and therefore to consume less fuel (eg. 140 g/km, equivalent to 5.3 l/100 km for a diesel vehicle).

Our vehicles are also equipped with a particle filter system including a catalytic converter, an oxygen sensor and an active carbon filter (the latter prevents vapour from the fuel tank being released into the open air).

For certain diesel vehicles, this system also has a particle filter to reduce the volume of soot particles emitted.

Please make your own contribution towards protecting the environment too

– Worn parts replaced in the course of routine vehicle maintenance (vehicle battery, oil filter, air filter, batteries, etc.) and oil containers (empty or filled with used oil) must be disposed of through specialist organisations.
– At the end of the vehicle's service life, it should be sent to approved centres to ensure that it is recycled.
– In all cases, comply with local legislation.

Recycling

Your vehicle is 85% recyclable and 95% recoverable.

To achieve these objectives, many of the vehicle components have been designed to enable them to be recycled. The materials and structures have been carefully designed to allow these components to be easily removed and reprocessed by specialist companies.

In order to preserve raw material resources, this vehicle incorporates numerous parts made from recycled plastics or renewable materials (vegetable or animal-derived materials such as cotton or wool).

Downloaded from www.Manualslib.com manuals search engine

GEAR LEVER

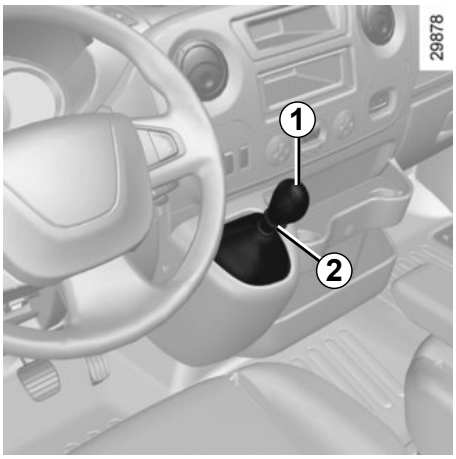

Gear lever

Selecting reverse gear
With the vehicle stationary, move the gear lever into neutral then into reverse. Follow the grid drawn on gear knob ***1***, lift ring ***2*** against the gear knob to select reverse gear.
The reversing lights will come on as soon as reverse gear is selected (with the ignition on).

Vehicles with sequential gearbox: refer to the information on the "Sequential gearbox" in Section 2.

An impact to the underside of the vehicle (e.g.: striking a post, raised kerb or other street furniture) may result in damage to the vehicle (e.g.: deformation of an axle).

To avoid any risk of accident, have your vehicle checked by an approved Dealer.

Downloaded from www.Manualslib.com manuals search engine

HANDBRAKE

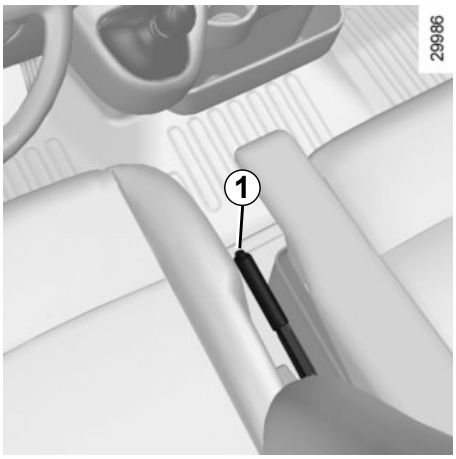

Handbrake

To apply:
Pull upwards, check that the vehicle is properly immobilised.

To release:
Pull the lever up slightly, press button ***1*** and then lower the lever to the floor.

Make sure that the handbrake is properly released when driving (red indicator light off), otherwise overheating, or even damage, may occur.

When the vehicle is stopped, depending on the gradient and/or the vehicle load, it may be necessary to apply the handbrake by at least two further notches and engage a gear (1st or reverse).

An impact to the underside of the vehicle (e.g.: striking a post, raised kerb or other street furniture) may result in damage to the vehicle (e.g.: deformation of an axle).

To avoid any risk of accident, have your vehicle checked by an approved Dealer.

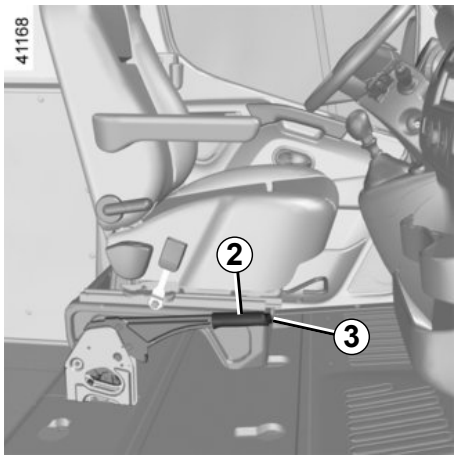

Pull-up handbrake
(depending on the vehicle)

To release

Press button ***3*** and pull lever ***2*** upwards then place it in a horizontal position.

To apply

Pull lever ***2*** upwards then release it. It returns to the horizontal position.

Downloaded from www.Manualslib.com manuals search engine

DRIVING CORRECTION DEVICES AND AIDS (1/5)

Depending on the vehicle, this is composed of:

- **anti-lock braking system (ABS);**
- **electronic stability program (ESC) with understeer control and traction control;**
- **driver assistance with a trailer;**
- **emergency brake assist;**
- **grip control;**
- **hill start assistance.**

Anti-lock braking system (ABS)

Under heavy braking, the ABS prevents the wheels from locking, allowing the stopping distance to be managed and keeping control of the vehicle.
Under these circumstances, the vehicle can be steered to avoid an obstacle whilst braking. In addition, this system can increase stopping distances, particularly on roads with low surface grip (wet ground etc.).
You will feel a pulsation through the brake pedal each time the system is activated. The ABS does not in any way improve the vehicle's physical performance relating to the road surface and road-holding. It is still **essential** to follow the rules of good driving practice (such as driving at a safe distance from the vehicle in front etc.).

In an emergency, apply **firm and continuous pressure** to the brake pedal. There is no need to pump it repeatedly. The ABS will modulate the force applied in the braking system.

Operating faults:

- and lit on the instrument panel with the messages “CHECK ABS”, “Check braking system” and “CHECK ESC”: ABS, ESC and emergency brake assist are deactivated. **Braking is always enabled**;
- , , and STOP lit up on the instrument panel alongside the message “BRAKING FAULT”: **this indicates a fault in the braking system.**

In both cases, please consult an Authorised Dealer.

Your braking systems are partially operational. However, it is **dangerous to brake suddenly** and it is essential to stop immediately, as soon as traffic conditions allow. Contact an approved dealer.

Downloaded from www.Manualslib.com manuals search engine

Electronic stability program (ESC) with understeer control and traction control

Electronic stability control ESC

This system helps you to keep control of the vehicle in critical driving conditions (avoiding an obstacle, loss of grip on a bend, etc.).

Operating principle

A sensor in the steering wheel detects the direction selected by the driver.

Other sensors throughout the vehicle measure the actual direction.

The system compares driver input to the actual trajectory of the vehicle and corrects the trajectory if necessary by controlling the braking of certain wheels and/or engine power. In the event that the system is engaged, indicator light flashes on the instrument panel.

Understeer control

This system optimises the action of the ESC in the case of pronounced understeer (loss of front axle road holding).

Traction control

This system helps to limit wheelspin of the drive wheels and to control the vehicle when pulling away accelerating or decelerating.

Operating principle

Using the wheel sensors, the system measures and compares the speed of the drive wheels at all times and slows down their over-rotation. If a wheel is starting to slip, the system brakes automatically until the drive supplied becomes compatible with the level of grip under the wheel again.

The system also adjusts the engine speed to the grip available under the wheels, independently of the pressure exerted on the accelerator pedal.

Operating faults

When the system detects an operating fault the message “CHECK ESC” and warning light and appear on the instrument panel. In this case, the ESC and traction control system are deactivated.
Consult an approved dealer.

These functions are an additional aid in the event of critical driving conditions, enabling the vehicle behaviour to be adapted to suit the driving conditions.

However, the functions do not take the place of the driver. **They do not increase the vehicle’s limits and should not encourage you to drive more quickly.** Therefore, they can under no circumstances replace the vigilance or responsibility of the driver when manoeuvring the vehicle (the driver must always be ready for sudden incidents which may occur when driving).

Downloaded from www.Manualslib.com manuals search engine

Driver assistance with a trailer

This system helps to maintain control over the vehicle while using a trailer. It detects shaking caused by towing a trailer under certain driving conditions.

Operating conditions

– the towbar must be approved by an authorised dealer;
– the harness must be approved by an authorised dealer;
– the towbar must be connected to the vehicle.

Operating principle

The function stabilises the vehicle by:

– asymmetric braking of the front wheels to reduce shaking caused by the trailer;
– braking of all four wheels and limitation on engine torque to reduce the vehicle speed until the shaking has stopped.

Warning light flashes on the instrument panel to inform the driver.

Emergency brake assist

This system supplements the ABS and helps reduce vehicle stopping distances.

Operating principle

The system is for detecting an emergency braking situation. In this case, the braking assistance immediately develops maximum power and may trigger ABS regulation.

ABS braking is maintained as long as the brake pedal is applied.

Hazard warning lights switching on

Depending on the vehicle, these may light up in the event of sudden deceleration.

Operating faults

When the system detects an operating fault the message “CHECK ABS” appears on the instrument panel along with the warning light.

Consult an approved dealer.

Downloaded from www.Manualslib.com manuals search engine

Grip control

If fitted on the vehicle, grip control makes it easier to control the vehicle on low grip surfaces (soft ground, etc.).

These functions are an additional aid in the event of critical driving conditions, enabling the vehicle behaviour to be adapted to suit the driving conditions.

However, the functions do not take the place of the driver. **They do not increase the vehicle's limits and should not encourage you to drive more quickly.** Therefore, they can under no circumstances replace the vigilance or responsibility of the driver when manoeuvring the vehicle (the driver must always be ready for sudden incidents which may occur when driving).

"Road" mode

Upon starting up the vehicle, the "STANDARD HIGHWAY MODE" message is displayed on the instrument panel. Warning light on the instrument panel is out.
This position enables optimal usage under normal driving conditions (dryness, humidity, light snow, etc.).
"Road" mode uses traction control functions.

"Soft ground" mode

Press the switch ***1***: warning light comes on the instrument panel accompanied by the message "VARIABLE HIGHWAY MODE".

This position enables optimal usage on soft ground (mud, sand, dead leaves, etc.). "Soft ground" mode uses traction control functions. The system automatically switches to "Road" mode at speeds above 30 mph (50 km/h), and warning light on the instrument panel goes out.

Tyres
When they need to be replaced, only tyres of the same make, size, type and profile should be used.

Tyres fitted to the vehicle should either be identical to those fitted originally or conform to those recommended by your approved dealer.

Downloaded from www.Manualslib.com manuals search engine

Hill start assistance

Depending on the gradient of the incline, this system assists the driver when starting on a hill. It prevents the vehicle from rolling backwards, depending on the slope, by automatically applying the brakes when the driver lifts his/her foot off the brake pedal to depress the accelerator pedal.

System operation

It only operates when the gear lever is in a position other than neutral and the vehicle is completely stationary (brake pedal depressed).

The system holds the vehicle for approximately **2 seconds**. The brakes are then gradually released (the vehicle will move according to the slope).

The hill start assistance system cannot completely prevent the vehicle from rolling backwards in all situations (extremely steep gradients, etc.).

In all cases, the driver may depress the brake pedal to prevent the vehicle from rolling forwards or backwards.

The hill start assistance function should not be used for prolonged stops: use the brake pedal.

This function is not designed to immobilise the vehicle permanently.

If necessary, use the brake pedal to stop the vehicle.

The driver must remain particularly vigilant when driving on slippery or low-grip surfaces and/or on hills.

Risk of serious injury.

Downloaded from www.Manualslib.com manuals search engine

TYRE PRESSURE LOSS WARNING (1/3)

When fitted to the vehicle, this system notifies the driver if one or more tyres lose pressure.

Operating principle

Each wheel (except for the emergency spare wheel) has a sensor in the inflation valve which periodically measures the tyre pressure while driving.

Warning light ***1*** comes on to alert the driver in the event of insufficient pressure (deflated wheel, punctured tyre, etc.).

Resetting the standard level for the tyre pressures

This should be done:
- when the standard tyre pressure needs to be changed to adapt to usage conditions (empty, carrying a load, motorway driving, etc.);
- after swapping a wheel (however this practice is not recommended);
- after changing a wheel.

It should always be done after checking the tyre pressure of all four tyres when cold.

Tyre pressures must correspond to the current usage of the vehicle (empty, carrying a load, motorway driving, etc.).

This function is an additional driving aid.

However, the function does not take the place of the driver. It cannot, therefore, under any circumstances replace the vigilance or the responsibility of the driver.

Check the tyre pressures, including the emergency spare wheel, once a month.

Downloaded from www.Manualslib.com manuals search engine

TYRE PRESSURE LOSS WARNING (2/3)

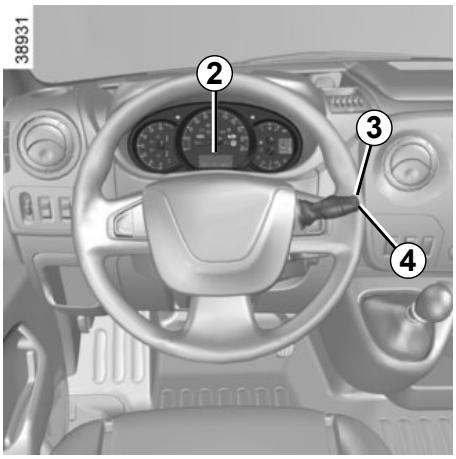

Resetting procedure
With the ignition on:
– repeatedly press button ***3*** or ***4*** to select the "TYRE PRESSURE ACQUISITION" function on the display ***2***;
– press and hold (around 3 seconds) button ***3*** or ***4*** to start initialisation. Display of the message "TP ACQUISTION LAUNCHED" indicates that the reset request for the tyre pressure reference value has been taken into account.

Reinitialisation is carried out after a few minutes' driving.

Note:
The standard tyre pressure cannot be less than that recommended and indicated on the door frame.

Display

Display ***2*** on the instrument panel informs you of any tyre pressure faults (flat tyre, punctured tyre, etc.).

"CHECK TYRE PRESSURES"

Warning light comes on, along with the message "CHECK TYRE PRESSURES".

These indicate that at least one tyre is flat.

Check and, if necessary, readjust the pressures of the four wheels when cold.

The warning light goes off after a few minutes' driving.

The sudden loss of pressure in a tyre (burst tyre, etc.) cannot be detected by the system.

"TYRE PUNCTURE"

The warning light comes on steady, accompanied by the message "TYRE PUNCTURE" and a beep.

This message appears along with the STOP warning light.

They indicate that at least one wheel is punctured or severely underinflated. Replace it or contact an approved dealer if it is punctured. Top up the tyre pressure if the wheel is deflated.

Warning light STOP requires you to stop immediately, for your own safety, as soon as traffic conditions allow.

Downloaded from www.Manualslib.com manuals search engine

TYRE PRESSURE LOSS WARNING (3/3)

“CHECK TYRE SENSORS”

The warning light flashes for several seconds, then stays on, along with the message “CHECK TYRE SENSORS”.

This message appears along with the warning light.

They indicate that at least one tyre is not fitted with sensors (e.g. emergency spare wheel). Otherwise, consult an authorised dealer.

Readjustment of tyre pressures

The tyre pressures must be adjusted when cold (please refer to the label located on the edge of the driver’s door). If tyre pressures cannot be checked when the tyres are **cold**, the recommended pressures must be increased by **0.2** to **0.3** bar (**3** PSI).

Never deflate a hot tyre.

Replacing wheels/tyres

This system requires specific equipment (wheels, tyres, hubcaps, etc.). Please see the information on “Tyres” in Section 5.

Contact an approved Dealer to fit new tyres and to find out about available accessories compatible with the system and available from your dealer network: the use of any other accessory could affect the correct operation of the system or damage a sensor.

Emergency spare wheel

If the vehicle is equipped with an emergency spare wheel, it will not have a sensor. When it is fitted on the vehicle, the warning light flashes for several seconds, then stays on, together with the warning light and the message “CHECK TYRE SENSORS” appears on the instrument panel.

Tyre repair product and inflation kit

Because the valves are specially designed, only use equipment approved by the approved network. Please refer to “Tyre inflation kit” in Section 5.

Changing a wheel

The system may take several minutes depending on use for the new wheel pressures to be recognised; check the tyre pressures after all operations.

Downloaded from www.Manualslib.com manuals search engine

LANE DEPARTURE WARNING (1/2)

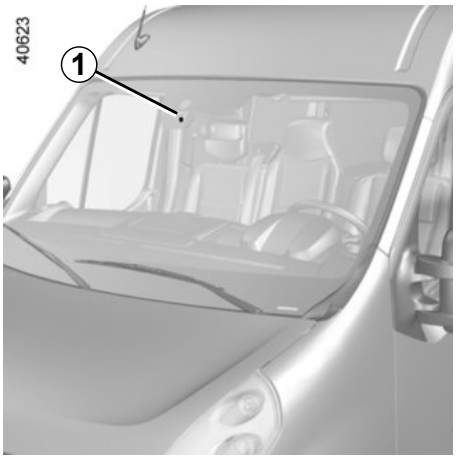

This system notifies the driver when they accidentally cross a continuous or broken line.
This function uses the camera ***1*** attached to the windscreen, behind the rear-view mirror.

Note: Make sure the windscreen is not obstructed (dirt, ice, snow, etc.).

This function is a driving aid in the event of the accidental crossing of a continuous or broken line in the road. However, the function is not intended to replace the driver. The function can be disrupted under certain conditions, including:

- poor visibility (rain, snow, fog, dirty windscreen, glare of the sun, partially obscured road lines, etc.);
- roads with tight bends;
- closely following a vehicle in the same lane;
- worn road markings, difficult to distinguish or spaced very widely apart;
- narrow roads;
- ...

In this case, warning light on the instrument panel goes out to indicate that the function will not operate (lines not detected).

Under no circumstances should this function replace the driver's care or responsibility whilst performing manoeuvres.

Downloaded from www.Manualslib.com manuals search engine

LANE DEPARTURE WARNING (2/2)

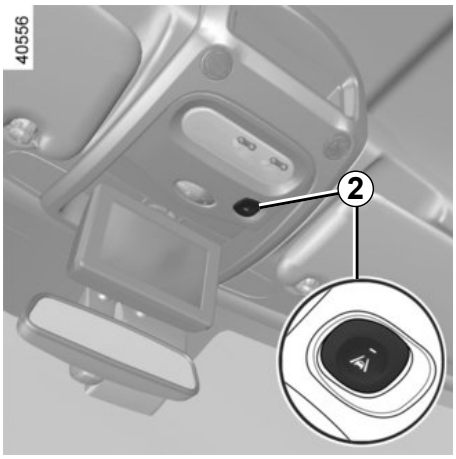

With the ignition on, the function is active by default.

Deactivating/Activating the function

To deactivate it, press button ***2***. The indicator light on button ***2*** comes on, accompanied by a message on the instrument panel “LANE DEPARTURE WARNING OFF”.

To activate it, press button ***2***.
The warning light on button ***2*** goes out, accompanied by a message on the instrument panel “LANE DEPARTURE WARNING ON”.

The function is set to notify the driver if:

– the indicator light on button ***2*** is off;
and
– the vehicle speed is greater than approximately 37.2 mph (60 km/h);
and
– lines are detected.

Warning light comes on on the instrument panel to notify the driver.

The function sounds the alarm if:

a line is crossed without activating the indicator lights. The function alerts the driver through a warning light on the instrument panel, along with a beep.

Conditions for non-activation of alerts

– Indicators activated or having been activated less than approximately four seconds prior to departing from the lane;
– Very fast lane departure;
– Driving continuously on a line;
– ...

Operating faults

In the event of a malfunction, a message “LANE DEPARTURE CHECK” is displayed on the instrument panel accompanied by the warning light . Consult an approved dealer.

Downloaded from www.Manualslib.com manuals search engine

CRUISE CONTROL/SPEED LIMITER: limiter function (1/3)

The speed limiter function helps you stay within the driving speed limit that you choose, known as the **limit speed**.

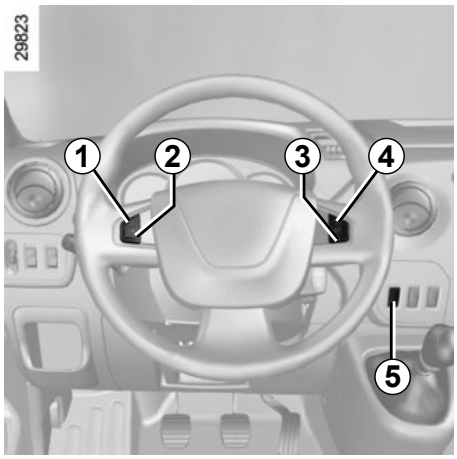

Controls

1 Limit speed activation, memorisation and increase switch (+).
2 Decrease limit speed (-).
3 Switch the function to standby (with limit speed memorisation (O)).
4 Activation and recall of memorised limit speed (R).
5 Main “On/Off” switch.

Switching on

Press the side switch ***5*** . The warning light ***6*** comes on, lit orange, and the message “SPEED LIMITER” appears on the instrument panel, accompanied by dashes to indicate that the speed limiter is activated and waiting to store a speed limit.
To memorise the current speed, press switch ***1*** (+): the minimum speed which can be memorised is 20 mph (30 km/h).

Downloaded from www.Manualslib.com manuals search engine

CRUISE CONTROL/SPEED LIMITER: limiter function (2/3)

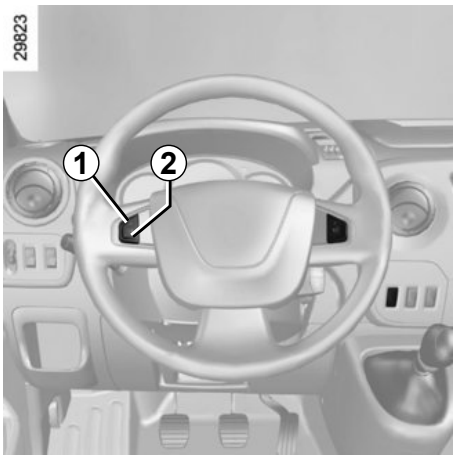

Driving

When a limited speed has been stored and this speed is not reached, driving is similar to driving a vehicle without the speed limiter function.

Once you have reached the stored speed, no effort on the accelerator pedal will allow you to exceed the programmed speed except in an emergency (refer to information on “Exceeding the limit speed”).

Varying the limit speed

The limit speed may be changed by repeatedly pressing:

– Switch ***1*** (+) to increase the speed;

– Switch ***2*** (-) to decrease the speed.

The speed limiter function is in no way linked to the braking system.

Exceeding the limit speed

It is possible to exceed the limit speed at any moment. To do this: press the accelerator pedal **firmly and fully** (beyond the kickdown point).

Whilst the speed is being exceeded, the limit speed displayed on the instrument panel flashes.

Then, as far as is possible, release the accelerator pedal: the speed limiter function will return as soon as you reach a speed lower than the memorised speed.

Limited speed cannot be maintained

When driving down a steep gradient, the system is unable to maintain the limit speed: the memorised speed will flash on the instrument panel information display to inform you of this situation.

Downloaded from www.Manualslib.com manuals search engine

CRUISE CONTROL/SPEED LIMITER: limiter function (3/3)

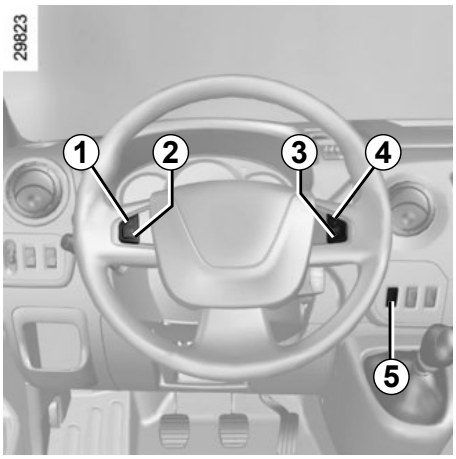

Putting the function on standby

The speed limiter function is deactivated when you press switch ***3*** (O). In this case, the speed limit remains stored and the message “SPEED MEMORY”, accompanied by this speed, appears on the instrument panel.

Recalling the limit speed

If a speed has been memorised, it can be recalled by pressing switch ***4*** (R).

Switching off the function

The speed limiter function is deactivated when you press switch ***5***. In this case, the speed is no longer memorised. The instrument panel orange indicator light goes out, confirming that the function is deactivated.

When the speed limiter is set to standby, pressing switch ***1*** (+) reactivates the function without taking into account the memorised speed: it is the speed at which the vehicle is moving that is taken into account.

Downloaded from www.Manualslib.com manuals search engine

CRUISE CONTROL/SPEED LIMITER: cruise control function (1/4)

The cruise control function helps you to maintain your driving speed at a speed that you choose, called the **cruising speed**.

This cruising speed may be set at any speed above 20 mph (30 km/h).

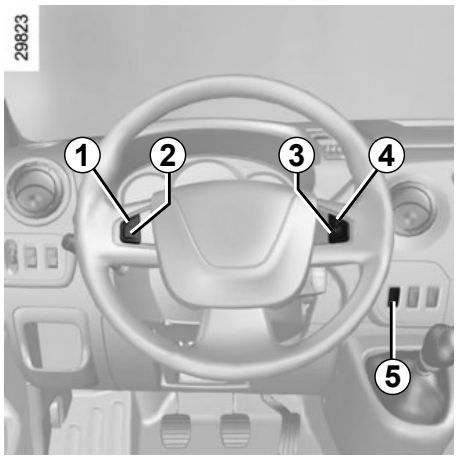

Controls

1 Cruising speed activation, storage and increase switch (+).
2 Cruising speed decrease switch (-).
3 Switch the function to standby (with stored cruising speed) (O).
4 Activation with recall of stored governed cruising speed (R).
5 Main “On/Off” switch.

The cruise control function is in no way linked to the braking system.

This function is an additional driving aid. However, the function does not take the place of the driver.

Therefore, it can under no circumstances replace the driver’s responsibility to respect speed limits and to be vigilant (the driver must always be ready to brake).

Cruise control must not be used in heavy traffic, on undulating or slippery roads (black ice, aquaplaning, gravel) and during bad weather (fog, rain, side winds etc.).

There is a risk of accidents.

Downloaded from www.Manualslib.com manuals search engine

CRUISE CONTROL/SPEED LIMITER: cruise control function (2/4)

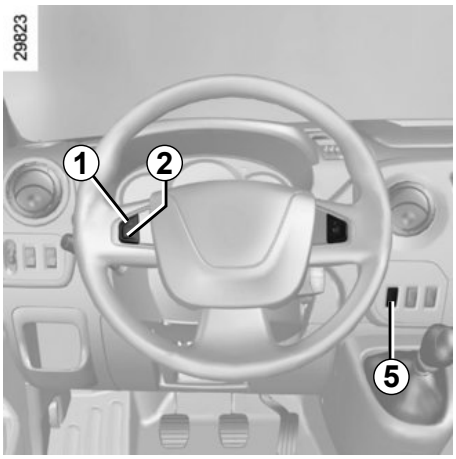

Switching on

Press switch ***5*** on the side showing .

Indicator light ***6*** comes on, lit green, and the message “CRUISE CONTROL” appears on the instrument panel, accompanied by dashes to indicate that the cruise control function is activated and waiting to store a cruising speed.

Activating cruise control

At a steady speed (above 20 mph (30 km/h) approximately) press switch ***1*** (+) or ***2*** (-): the function is activated and the current speed is memorised.

Cruise control activation is confirmed when indicator light ***7*** lights up in addition to indicator light ***6***.

Driving

Once a cruising speed is memorised and the cruise control function is active, you may lift your foot off the accelerator pedal.

Important: you are nevertheless advised to keep your feet close to the pedals in order to react if necessary.

Downloaded from www.Manualslib.com manuals search engine

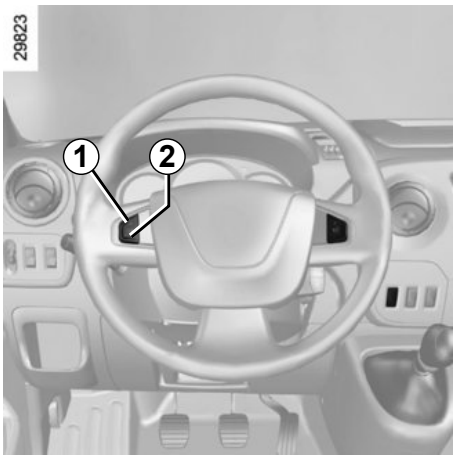

Adjusting the cruising speed

The cruising speed may be changed by pressing the following repeatedly:

– switch ***1*** (+) to increase the speed,

– switch ***2*** (-) to decrease the speed.

The cruise control function is in no way linked to the braking system.

Exceeding the cruising speed

The cruising speed may be exceeded at any time by depressing the accelerator pedal. While it is being exceeded, the cruising speed flashes on the instrument panel.

Then, release the accelerator pedal: after a few seconds, the vehicle will automatically return to its set cruising speed.

Cruising speed cannot be maintained

When driving down a steep gradient, the system is unable to maintain the cruising speed: the stored speed will flash on the instrument panel information display to inform you of this situation.

Downloaded from www.Manualslib.com manuals search engine

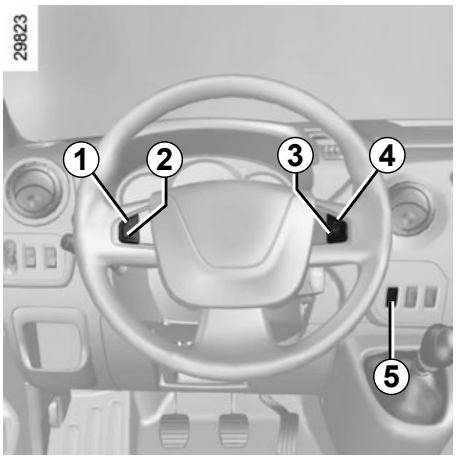

Putting the function on standby

The function is suspended when you:
- press button ***3*** (O);
- the brake pedal;
- depress the clutch pedal or shift into neutral if the vehicle has an automatic gearbox

In all three cases, the cruising speed remains stored and the message "SPEED MEMORY" appears on the instrument panel.
standby is confirmed when green indicator light goes out.

Recalling the cruising speed

If a speed is memorised, it can be recalled, once you are sure that the road conditions are suitable (traffic, road surface, weather conditions, etc.).

With a vehicle speed above 20 mph (30 km/h), press switch ***4*** (R).

Note: if the speed previously stored is much higher than the current speed, the vehicle will accelerate more rapidly to reach this threshold.

When the cruise control is set to standby, pressing switch ***1*** (+) reactivates the cruise control function without taking into account the memorised speed: it is the speed at which the vehicle is moving that is taken into account.

Switching off the function

The cruise control function is deactivated if you press switch ***5***: in this case a speed is no longer memorised.

The and indicator lights on the instrument panel go out, confirming that the function is deactivated.

Putting the cruise control on standby or switching it off does not cause a rapid reduction in speed: you must brake by depressing the brake pedal.

Downloaded from www.Manualslib.com manuals search engine

VEHICLE WITH OVERSPEED FUNCTION

The vehicle speed may be permanently set at a fixed value depending on the vehicle or on local legislation.

To adjust the value or activate/deactivate the function, consult an approved dealer.

In the event of statutory limits (depending on the vehicle), this function may not be deactivated.

Label ***1*** attached to the dashboard shows the speed limit.

Special case: if your vehicle is fitted with the Cruise control/Speed limiter, fully depressing the accelerator pedal (beyond the kickdown point) will not allow you to exceed the overspeed function set speed (refer to the information on the “Speed limiter” in Section 2).

In exceptional circumstances (e.g. steep gradient), the overspeed function speed may be exceeded slightly as the function does not affect the braking system.

The function does not take the place of the driver. Under no circumstances should it replace observation of speed limits nor vigilance and responsibility on the part of the driver.

Downloaded from www.Manualslib.com manuals search engine

PARKING DISTANCE CONTROL (1/2)

Operating principle

Ultrasonic sensors, fitted in the vehicle's rear bumper, measure the distance between the vehicle and an obstacle when reversing.

This measurement is indicated by beeps which become more frequent the closer you come to the obstacle, until they become a continuous beep when the vehicle is approximately 25 centimetres from the obstacle.

There is a beep when reverse gear is engaged. If the beep sounds for a long time (3 seconds), this signals an operating fault.

Note: make sure that the ultrasonic sensors are not obscured (by dirt, mud, snow, etc.).

An impact to the underside of the vehicle (eg. striking a post, raised kerb or other street furniture) may result in damage to the vehicle (eg. deformation of an axle).

To avoid any risk of accident, have your vehicle checked by an approved Dealer.

This function is an additional aid that indicates the distance between the vehicle and an obstacle whilst reversing, using sound signals.

Under no circumstances should it replace the driver's care or responsibility whilst reversing.

The driver should always pay attention to sudden incidents during driving: always ensure that there are no moving obstacles (such as a child, animal, pram, bicycle, etc.) or small, narrow objects such as stones or posts in your path when manoeuvring.

Downloaded from www.Manualslib.com manuals search engine

PARKING DISTANCE CONTROL (2/2)

Temporary deactivation of the system

Press switch ***1*** to deactivate the system.

The indicator light built into the switch lights up to remind you that the system is deactivated.

Pressing the switch again will reactivate the system and switch off the indicator light.

The system is automatically reactivated after the ignition is switched off and the engine restarted.

Prolonged deactivation of the system

You can deactivate the system permanently by pressing and holding switch ***1***.

The warning light built into the switch remains lit constantly.

The deactivated system can be reactivated by pressing and holding the switch again.

Operating faults

When the system detects an operating fault there will be a 3-second continuous beep as a warning. Consult an approved Dealer.

Downloaded from www.Manualslib.com manuals search engine

REVERSING CAMERA (1/2)

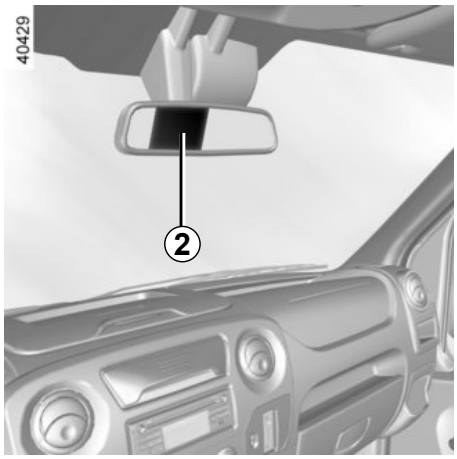

Operation

Moving into reverse gear, the camera ***1*** located on the tailgate or, depending on the vehicle, on the rear hinged door, provides a view of the area behind the vehicle on the rear-view mirror ***2*** or, depending on the vehicle, on the multimedia display ***3***, accompanied by two moving or fixed guide lines ***4*** and ***5***.

Note: make sure that the reversing camera is not obscured (by dirt, mud, snow, etc.).

NB: Depending on the vehicle, you can adjust certain settings from the multimedia display ***3***. Refer to the handbook for the equipment.

This function is an additional aid. It cannot, therefore, under any circumstances replace the vigilance or the responsibility of the driver.
The driver should always pay attention to sudden incidents during driving: always ensure that there are no moving obstacles (such as a child, animal, pram, bicycle, etc.) or small, narrow objects such as stones or posts in your path when manoeuvring.

Downloaded from www.Manualslib.com manuals search engine

REVERSING CAMERA (2/2)

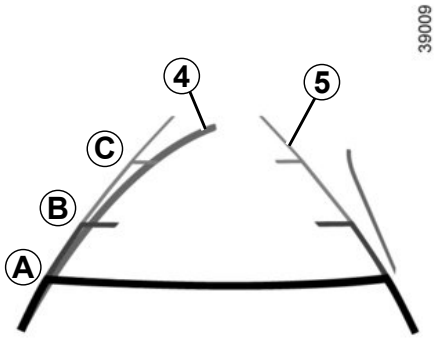

Dynamic gauge *4* (depending on the vehicle)
This is shown in blue on the multimedia display ***3***. It indicates the vehicle trajectory according to the position of the steering wheel.

Static guide line *5*:
The fixed clearance gauge comprises coloured markers ***A***, ***B*** and ***C***, indicating the distance behind the vehicle:

– ***A*** (red) approximately 30 centimetres from the vehicle;
– ***B*** (yellow) approximately 70 centimetres from the vehicle;
– ***C*** (green) approximately 150 centimetres from the vehicle.

This gauge remains fixed and indicates the vehicle trajectory if the wheels are in line with the vehicle.

This system is initially used with the aid of several gauges (mobile for trajectory and fixed for distance). When the red zone is reached, use the bumper image to stop accurately.

The screen shows a reverse image.

The frames are a representation projected onto flat ground; this information must not be taken into account when superimposed on a vertical object or an object on the ground.

Objects which appear on the edge of the screen may be deformed.

In very bright light (snow, vehicle in sunshine etc.), the camera vision may be adversely affected.

If the rear doors are open or poorly closed, the camera display disappears and, depending on the vehicle, the message “BOOT OPEN” appears.

Downloaded from www.Manualslib.com manuals search engine

POWER TAKE-OFF

Operating the function

With the vehicle stopped, the engine idling, the gearbox in neutral:

– depress the clutch pedal;

– press switch ***1***. The indicator light integrated into the switch will come on after 2 seconds;

– release the clutch pedal. The idle speed increases to 1,200 rpm.

Note:

When the power take-off is engaged, it is recommended that you do not change gear. If it becomes necessary to change gear, you must first disconnect the power take-off.

Operating faults

When the indicator light integrated into switch ***1*** does not come on or the power take-off is not triggered:

– with the clutch pedal depressed, press switch ***1*** and release the clutch pedal then repeat the procedure;

– or gradually release the clutch pedal.

Switching off the function

– Depress the clutch pedal;

– press switch ***1***. The indicator light integrated into the switch will go off after 2 seconds.

Downloaded from www.Manualslib.com manuals search engine

FAST IDLE SPEED

Press control ***1***, and the function will be activated after a few seconds.

Modifying fast idle speed

To increase or reduce the speed, contact an approved dealer.

Switching off the function

The function is interrupted when:

– you depress the clutch pedal and/or accelerator pedal;

– the sequential gearbox is not in neutral;

– the vehicle speed is above 0 mph;

– the STOP indicator light is lit up on the instrument panel;

– the indicator light is lit up on the instrument panel;

– the indicator light is lit up on the instrument panel.

Downloaded from www.Manualslib.com manuals search engine

SELF-LOCKING DIFFERENTIAL

The self-locking differential controls the torque transmitted to each rear wheel.

Depending on the grip conditions on the road surface, and at low speeds (under 20 mph / 30 kph), this device enables wheel torque to move automatically, thereby providing increased grip. This enables the grip potential of each wheel to be used to the fullest possible extent, thereby enabling the vehicle to run over areas with decreased grip (e.g.: work sites, muddy ground, etc.).

Once the rear wheels return to surfaces with normal grip (eg: return to paved roads), the self-locking differential device will be deactivated, sometimes accompanied by a noise (with no consequence to vehicle behaviour). You have the option of turning this device off yourself, once normal grip conditions have resumed, by briefly releasing the accelerator

This function is an additional driving aid.

However, it does not increase the vehicle's limits and should not encourage you to drive more quickly.

It cannot, therefore, under any circumstances replace the vigilance or the responsibility of the driver.

Downloaded from www.Manualslib.com manuals search engine

SEQUENTIAL GEARBOX (1/6)

Selector lever *1*

– This allows you to shift directly from first gear to reverse gear, to select reverse gear and neutral and to change gear in manual mode.

– It also allows you to switch between manual and automatic modes at any time, with the engine switched on and reverse gear engaged, by moving the lever to the left.

Note: the selector lever automatically returns to the middle position after use.

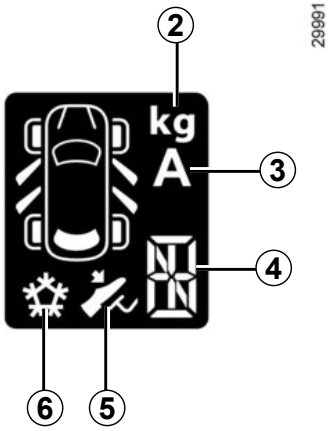

Display

2 Load mode

3 Automatic mode

4 Gear display

5 Brake pedal depressed indicator light

6 Snow mode (depending on the vehicle)

The gear selected **(1, 2…, 6, N, R)** is displayed on the instrument panel. In automatic mode, **(A)** is displayed.

Operation

Switch on the ignition.

The display on the instrument panel switches on.

If neutral **(N)** is displayed and is accompanied (depending on the vehicle), by the ***5*** warning light; press the brake pedal and start the engine but do not accelerate.
If a gear other than neutral is engaged, **N** flashes on the display accompanied by the ***5*** warning light; press the brake pedal and place the lever in position **N**. Start the engine.

Note: do not attempt to start the engine by pushing the vehicle if the battery is flat (the display remains off when the ignition is switched on).

Downloaded from www.Manualslib.com manuals search engine

SEQUENTIAL GEARBOX (2/6)

Starting

Moving forwards (starting in neutral)

The display indicates gears N and A.

– With the brake pedal depressed, push the selector lever forwards then release it.

– Release the brake pedal and accelerate gently to move forwards.

Reverse gear (vehicle stationary)

– **Brake pedal depressed.** Push the selector lever towards the right and to the rear as shown on the base of the lever, and then release it. Reverse gear is engaged and the letter **R** appears on the display.

– Release the brake pedal:

  – the engine's idle speed is sufficient for parking manoeuvres;

  – accelerate gently to reverse.

You may shift from reverse gear to a forwards gear by pushing the lever forwards once the vehicle is stationary.

Note: when the vehicle is stationary, you must depress the brake pedal to engage or disengage a gear. Otherwise, warning light ***5*** will come on.

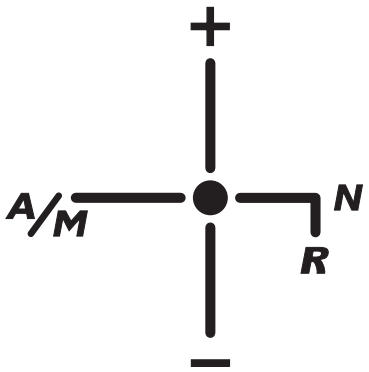

Gear shift pattern

(see the marking on the lever base)

+ To move up through the gears

– To move down through the gears

N Neutral

R Reverse

● Only stable position of the lever

A/M To switch from automatic mode to manual mode and vice versa

Exactly like a vehicle equipped with a manual gearbox, a vehicle equipped with a sequential gearbox is unable to prevent the vehicle from rolling on a slope if the handbrake is not applied or the brake pedal constantly depressed.

Downloaded from www.Manualslib.com manuals search engine

Operation in semiautomatic mode (manual)

This mode can be activated at any time when driving by pushing the lever to the left. The mode is switched without shifting up a gear.

You can initiate gear changes using the selector lever.

To shift up a gear, push the selector lever forwards; the accelerator pedal does not have to be lifted.

To shift down a gear, push the selector lever backwards; the accelerator pedal does not have to be lifted.

The system will not tolerate a series of up or down changes that cause the engine to underrev or overrev.

By pushing the lever forwards twice you can move up two gears at a time (except if underrevving). By pushing the lever backwards twice you can move down two gears at a time (unless this causes overrevving).

When decelerating with the foot off the pedal, the gears will automatically drop to the low engine speed limit to avoid stalling. First gear automatically shifts below a certain speed limit. You can stop the vehicle at red lights or junctions etc. by depressing the brake pedal; there is no need to change to neutral **(N)**.

The vehicle will move off again:

– either slowly, if you release the brake without accelerating (e.g. when in a traffic jam),

– or quickly, if you release the brake and accelerate.

Note: neutral may only be selected when the vehicle is being driven or is stationary when **the brake pedal is depressed (if you forget, warning light *5* will light up).**

Push the gear selector lever to the right to engage neutral.

If the engine speed is too high or too low, the system will choose the optimum gear.

Semiautomatic mode can be deactivated and reactivated at any time when the engine is running by pushing the lever to the left.

Downloaded from www.Manualslib.com manuals search engine

Operation in automatic mode

Automatic mode is selected by default every time the ignition is switched on.

The letter **A** appears on the display. The vehicle is controlled using the accelerator and the brake. Gears will change automatically at the correct moment and at a suitable engine speed because the automatic mode takes the road surface and the chosen driving style into consideration.

Gears may be shifted manually in this mode. Pushing the lever forwards or backwards shifts a gear upwards (except if there is a risk of underrevving) or downwards (except if there is a risk of overrevving).

Note:

Automatic mode takes account of:

– the position and speed of depression of the accelerator pedal to assess driving style and select the optimum gear;

– action on the brake pedal, to commence engine braking in preparation for a downshift.

You can stop the vehicle at red lights, with the gear engaged, by depressing the brake pedal; there is no need to change to neutral **(N)**.

The vehicle will move off again:

– either slowly, if you release the brake without accelerating (e.g. when in a traffic jam);

– or quickly, if you release the brake and accelerate.

The oil level in the automatic gearbox system reservoir varies depending on use. Adding oil is **strictly forbidden** (except by qualified approved network personnel).

Downloaded from www.Manualslib.com manuals search engine

SEQUENTIAL GEARBOX (5/6)

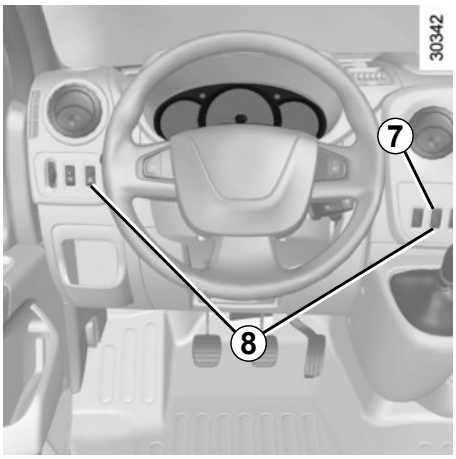

Special circumstances

Snow mode
(depending on vehicle)

If you are driving on ground where you are likely to skid (snow, mud, etc.), press switch ***7*** and indicator light on the instrument panel will come on.
Once these driving conditions no longer apply, exit this position by pressing switch again; the operating tell-tale goes out.

Switching to snow mode selects the gearbox automatic mode (switching to manual deselects snow mode until automatic mode is selected again).

Snow mode is deselected every time the engine is switched off. It will be necessary to select it again.

Load position

When the vehicle is driven loaded, press the ***8*** switch on the dashboard. The indicator light **kg** on the instrument panel will light up.

Load mode is deselected every time the engine is switched off. It will be necessary to select it again.

Load mode may be used to equal effect in both automatic and manual modes.

Accelerating and overtaking
- slowly depress the accelerator pedal to accelerate gradually;
- **to obtain maximum vehicle performance regardless of the mode selected (automatic or manual), quickly depress the accelerator pedal beyond the kickdown point.**

The speed with which you depress the pedal will allow you to downshift according to the vehicle's capabilities.

Parking
It is possible to park in gear (for example, on a slope):
- with the ignition on, select a gear **with your foot on the brake**;
- check that a gear other than **N** is displayed on the instrument panel, then remove the ignition key;
- **apply the handbrake**.

To disengage the gear, switch on the ignition without starting the engine and shift the selector lever to neutral **with the brake pedal depressed**. Check that **N** is displayed on the instrument panel.

Downloaded from www.Manualslib.com manuals search engine

SEQUENTIAL GEARBOX (6/6)

Bleep

– If you hold the vehicle on a slope for too long without applying the brakes or handbrake, you will strain the system (risk of overheating the clutch).

  In this case, an intermittent beeping sound will remind you that you should put your foot on the brake pedal or apply the handbrake.

– Never leave the vehicle with the engine running when in gear. For safety reasons you will hear an intermittent beeping sound when you open the door if you have not shifted into neutral or you have not switched off the ignition or depressed the brake pedal.

Operating faults

If this warning light comes on when the **vehicle is in motion**, it indicates a fault in the system. In most cases, you may still drive the vehicle, although it will not function perfectly. Contact an approved dealer as soon as possible.

Towing a vehicle with a sequential gearbox

If the gearbox is stuck in a gear:

– switch on the ignition;

– select neutral **with the brake pedal depressed**;

– check that the gearbox is in neutral (by pushing the vehicle, for example).

If you cannot find neutral you must tow the vehicle with the front wheels raised.

The vehicle should always be towed with the ignition switched off.

Downloaded from www.Manualslib.com manuals search engine

Section 3: Your comfort

Air Vents 3.2
Manual air conditioning/heating system 3.4
Automatic climate control 3.7
Air conditioning: information and advice on use 3.13
Windows 3.14
Interior lighting 3.16
Sun visor, grab handle 3.17
Ashtrays, Cigarette lighter, Accessories socket 3.18
Passenger compartment storage, fittings 3.19
Rear bench seats 3.25
Multimedia equipment 3.27
Transporting objects 3.28

Downloaded from www.Manualslib.com manuals search engine

AIR VENTS, air outlets (1/2)

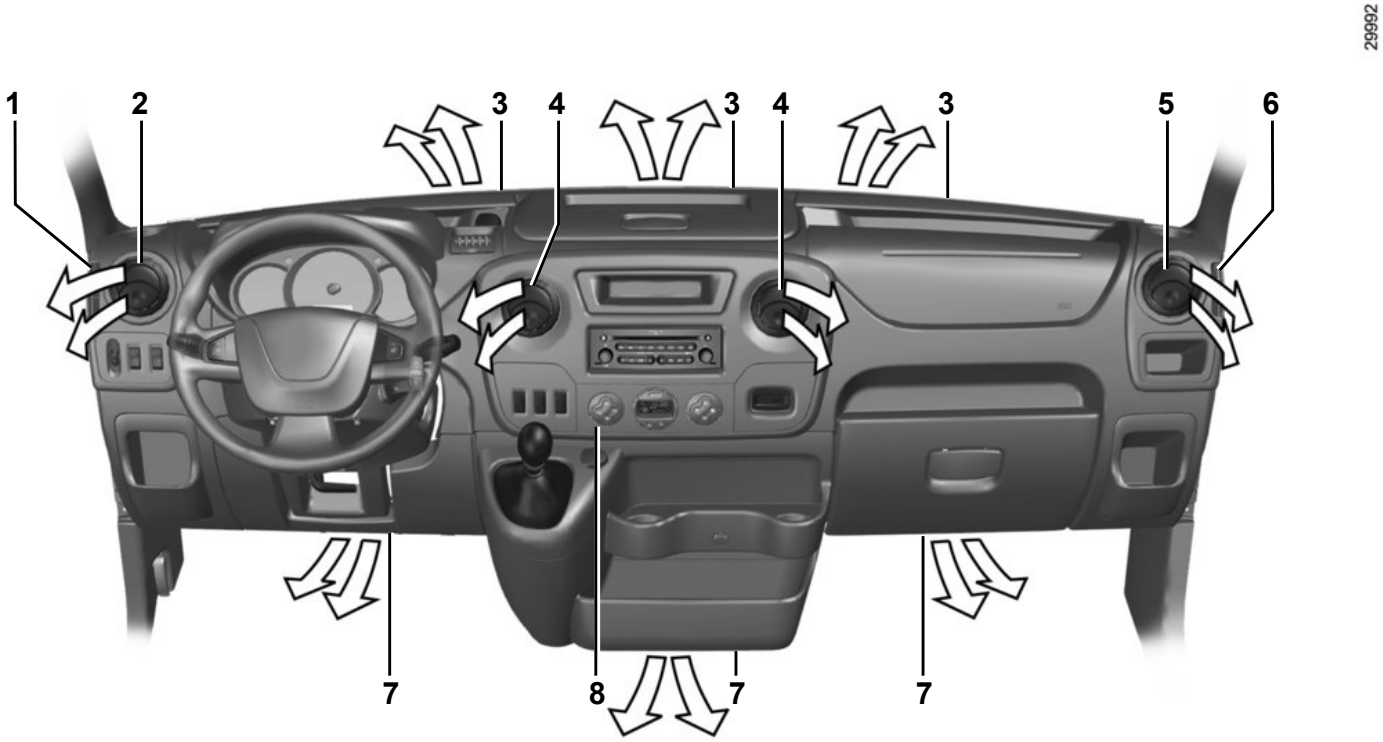

1 Side window demister outlet.

2 Side air vent.

3 Windscreen demisting vents.

4 Centre air vents.

5 Side air vent.

6 Side window demister outlet.

7 Passenger footwell heater outlets.

8 Control panel.

Downloaded from www.Manualslib.com manuals search engine

AIR VENTS, air outlets (2/2)

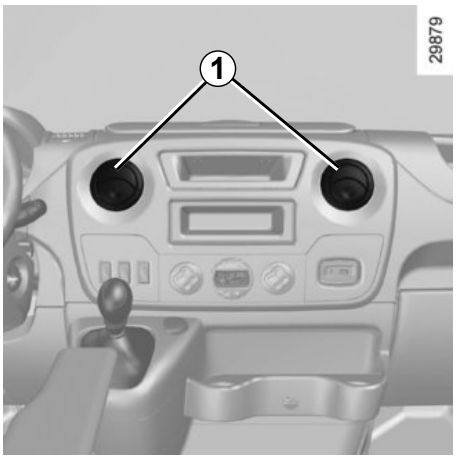

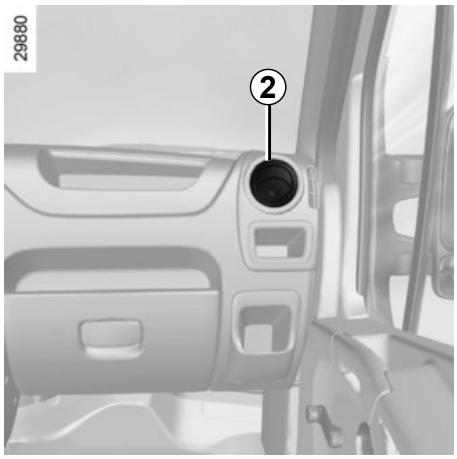

Air vent *1* or *2*

To open, press on the air vent.

To direct, take hold of the air vent and turn it to the required position.

To remove bad odours from your vehicles, only use the systems designed for this purpose. Consult an approved Dealer.

Do not add anything to the vehicle's ventilation circuit (for example, to remove bad odours).

There is a risk of damage or of fire.

Downloaded from www.Manualslib.com manuals search engine

MANUAL AIR CONDITIONING/HEATING SYSTEM (1/3)

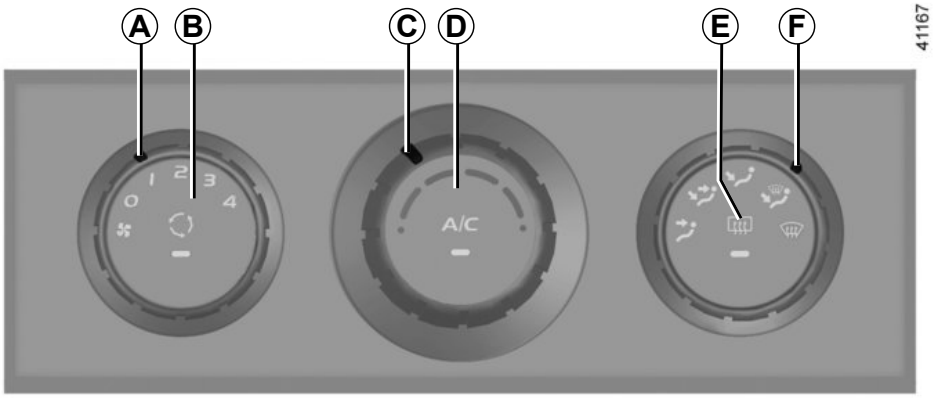

Controls

A Adjusting the amount of air blown into the passenger compartment.
B Air recirculation operation (isolation of the passenger compartment)
C Adjusting the air temperature.
D Activating air conditioning (depending on the vehicle).
E Rear screen and/or door mirror de-icing/demisting.
F Air distribution.

Information and advice for use
Refer to information on “Air conditioning: information and advice on use”.

Distribution of air in the passenger compartment

Turn control ***F***.

All the air flow is directed to the dashboard vents.

This selection is not appropriate if all the air vents are closed.

The air flow is directed to the dashboard vents and the footwells.

The air flow is directed mainly towards the footwells.

The air flow is distributed between all the air vents, the front side window demisting vents, the windscreen demisting vents and the footwells.

The air flow is directed to the windscreen demisting/de-icing outlets and the side windows. This position prevents the formation of condensation. Use at the highest temperature.

Rear screen and/ or door mirror de-icing/ demisting.

Press button ***E***: the integrated indicator light comes on. This function demists the rear screen and/or the heated door mirrors quickly.

To exit this function, press the button again; the integrated indicator goes out. Demisting automatically stops by default.

Downloaded from www.Manualslib.com manuals search engine

MANUAL AIR CONDITIONING/HEATING SYSTEM (2/3)

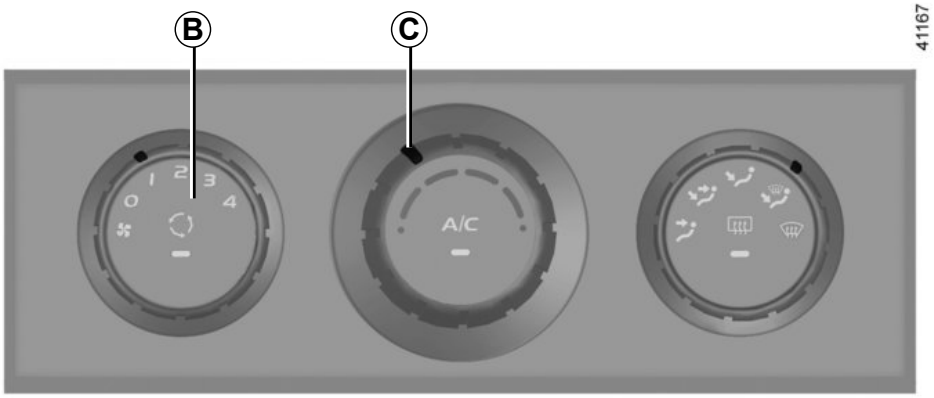

Adjusting the air temperature

Turn control ***C***.

Turning the control to the right increases the temperature.

Air recirculation operation (isolation of the passenger compartment)

Normal operation of the heating and ventilation system is obtained using air from outside.

Recirculation of air allows the external atmosphere to be isolated (driving in polluted areas, etc.).

Press button ***B*** to switch to isolation mode.

This function also allows the desired comfort level to be achieved as quickly as possible.

This starts or stops air recirculation. Operating tell-tale lights up when the function is operational. In this position the air is taken from inside the passenger compartment and is recycled without letting air in from outside.

Prolonged use of this position can lead to condensation forming on the side windows and windscreen and problems due to the use of non-renewed air in the passenger compartment.

We therefore advise you to return to normal mode (external air) as soon as the air recirculation function is no longer required, by pressing button ***B*** again.

Downloaded from www.Manualslib.com manuals search engine

MANUAL AIR CONDITIONING/HEATING SYSTEM (3/3)

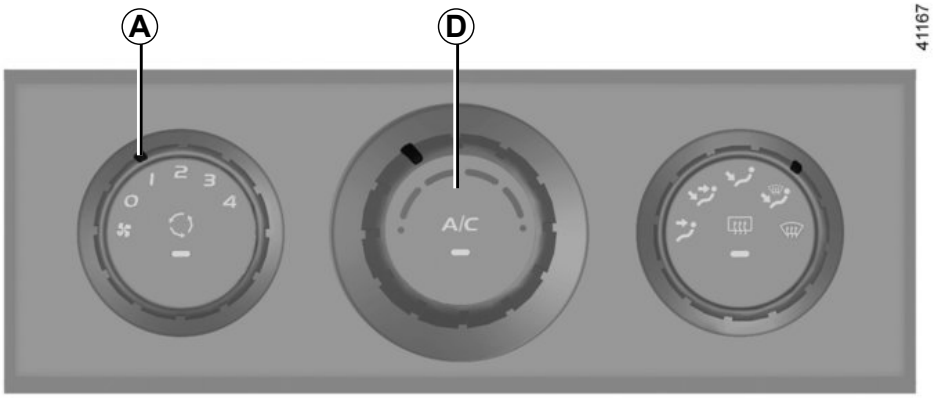

Adjusting the amount of air blown into the passenger compartment

Turn control ***A*** from **0** to **4**.

The passenger compartment is ventilated by blown air.

The blower determines how much air enters but vehicle speed also has some influence on this.

The further the control is positioned to the right, the greater the amount of air blown into the passenger compartment.

Switching air conditioning on or off

(depending on the vehicle)

The air conditioning is switched on (indicator light lit) or off (indicator light off) using button ***D***.

The air conditioning system is used for:

– lowering the temperature inside the passenger compartment;
– eliminating condensation more quickly.

Note: the air conditioning does not operate if the exterior temperature is low or the ventilation speed is less than **1**.

Downloaded from www.Manualslib.com manuals search engine

AUTOMATIC CLIMATE CONTROL (1/6)

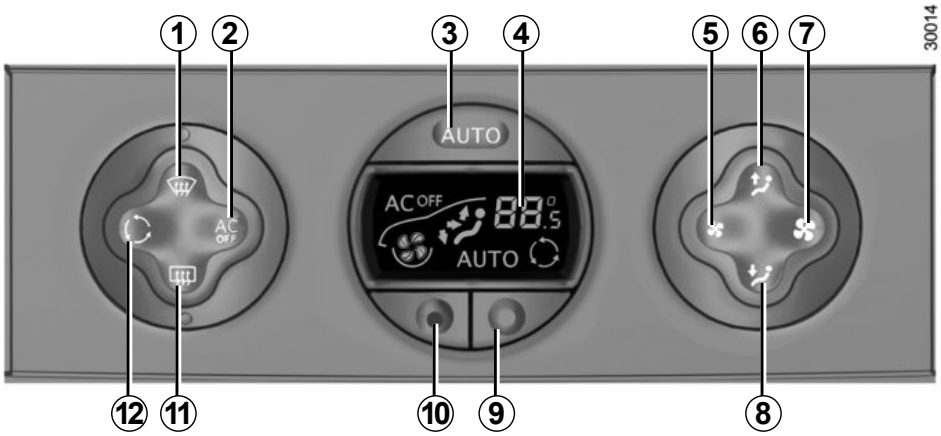

Controls
(depending on vehicle)

1 - “Clear View” button to demist and de-ice the windows.

2 - Air conditioning off button.

3 - Automatic mode.

4 - Display.

5 and ***7*** - Adjusting the ventilation speed.

6 and ***8*** - Passenger compartment air distribution adjustment.

9 and ***10*** - Adjusting the air temperature.

11 - Heated rear screen and/or heated door mirror de-icing.

12 - Air recirculation control.

Information and advice for use

Refer to information on “Air conditioning: information and advice on use”.

Downloaded from www.Manualslib.com manuals search engine

AUTOMATIC CLIMATE CONTROL (2/6)

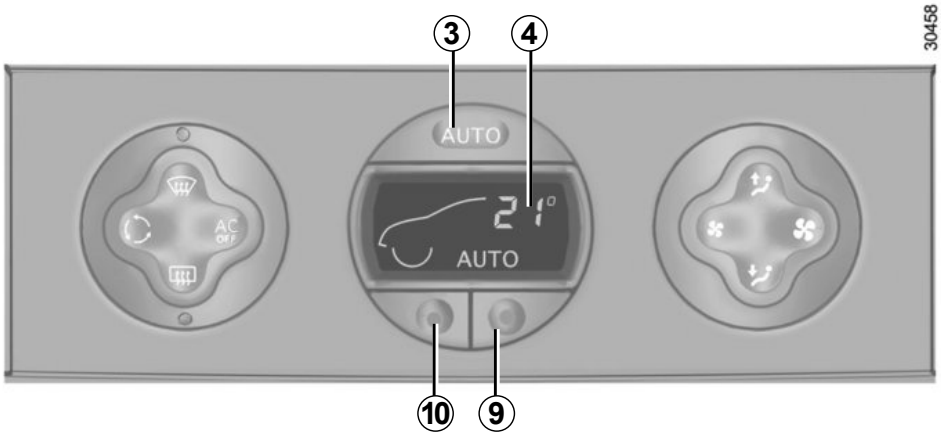

Automatic mode

Press button ***3***. AUTO lights up on display ***4***.

In most cases, the automatic climate control system ensures a comfortable temperature in the passenger compartment, while maintaining good visibility and optimising fuel consumption.

This is the recommended mode of use.

To reach and keep the chosen comfort level and to maintain good visibility, the system controls:

– ventilation speed;

– air distribution;

– air recirculation management;

– air conditioning start/stop;

– the air temperature.

Only the temperature and the AUTO symbol are displayed

Functions managed in automatic mode are not displayed.

– press button ***9*** to increase the temperature;

– press button ***10*** to decrease the temperature.

Note: The maximum and minimum settings of 15°C and 27°C allow the system to produce a minimum or maximum temperature, whatever the ambient conditions.

In automatic mode (AUTO lit on the display), all heating and air conditioning functions are controlled by the system.

When you modify certain functions, AUTO goes out. Only the modified function stops being controlled by the system.

Downloaded from www.Manualslib.com manuals search engine

AUTOMATIC CLIMATE CONTROL (3/6)

Adjusting automatic mode

The system normally operates in automatic mode but you can alter the standard settings used by the system (air distribution, etc.). These options are explained on the following pages.

Automatic mode is the recommended mode of use

In most cases, the automatic climate control system ensures a comfortable temperature in the passenger compartment, while maintaining good visibility and optimising fuel consumption.

The types of adjustments that can be made are described in the following pages.

Return to automatic mode as soon as possible.

The displayed temperature values show a comfort level.

When starting the engine, increasing or decreasing the value displayed will not allow the comfort level to be reached any more quickly. The system will always optimise the temperature increase or decrease (the ventilation system does not start instantly at maximum speed: it gradually increases). This may take several minutes.

Generally speaking, unless there is a particular reason not to, the dashboard air vents should remain open.

Downloaded from www.Manualslib.com manuals search engine

AUTOMATIC CLIMATE CONTROL (4/6)

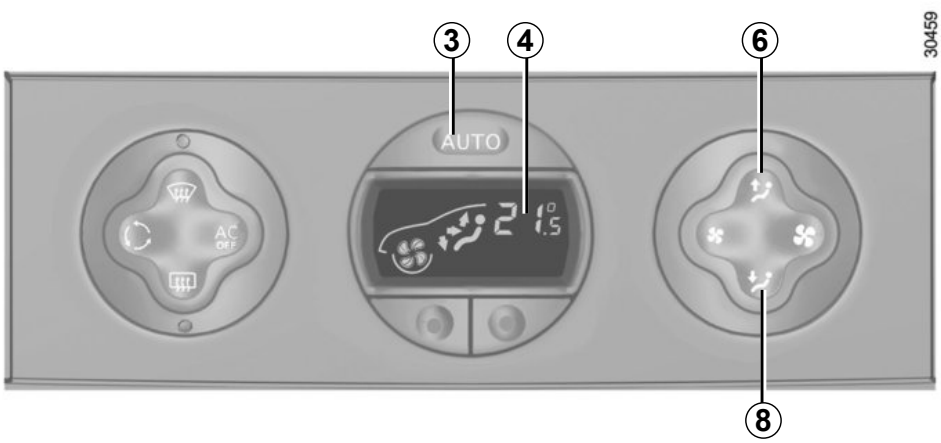

Distribution of air in the passenger compartment

There are five possible combinations for air distribution, which may be selected by pressing buttons ***6*** and ***8*** repeatedly. The arrows on display ***4*** indicate the setting selected:

The air flow is directed to the windscreen demisting vents and the side windows.

The air flow is directed to the windscreen and side window demisting vents, and the passenger footwells.

The air flow is directed mainly to the dashboard air vents.

The air flow is directed towards all the air vents and the passenger footwells.

The air flow is directed mainly towards the footwells.

The manual air distribution option causes the operating tell-tale light on display ***4*** to go out (automatic mode), but only air distribution is no longer controlled automatically by the system.

Press button ***3*** to return to automatic mode.

Downloaded from www.Manualslib.com manuals search engine

AUTOMATIC CLIMATE CONTROL (5/6)

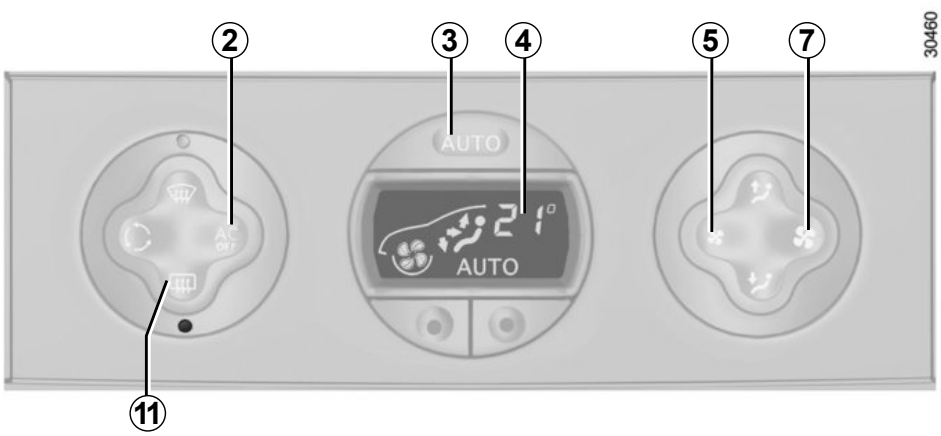

Switching air conditioning on or off

In automatic mode, the system switches the air conditioning system on or off, depending on the climate conditions.

Exit automatic mode by pressing button ***2***: AUTO goes out on display ***4*** and AC OFF lights up.

Note: the “Clear View” function automatically activates the air conditioning. Press button ***3*** to return to automatic mode.

Varying the ventilation speed

In automatic mode, the system uses the most suitable amount of air to reach and maintain the desired comfort level.

Exit automatic mode by pressing buttons ***5*** and ***7***.

These buttons allow you to increase or decrease ventilation speed.

Rear screen and/or door mirror de-icing/demisting.

Press button ***11***: the integrated indicator light comes on.

This function allows electric demisting of the rear screen and/or the electric heated door mirrors, depending on the vehicle.

To exit this function, press button ***11*** again. Demisting automatically stops by default.

In automatic mode, depending on the outside air conditions, the ventilation may not start immediately at maximum power but will increase progressively until the engine temperature is warm enough to heat the passenger compartment air. This may take from a few seconds to several minutes.

Downloaded from www.Manualslib.com manuals search engine

AUTOMATIC CLIMATE CONTROL (6/6)

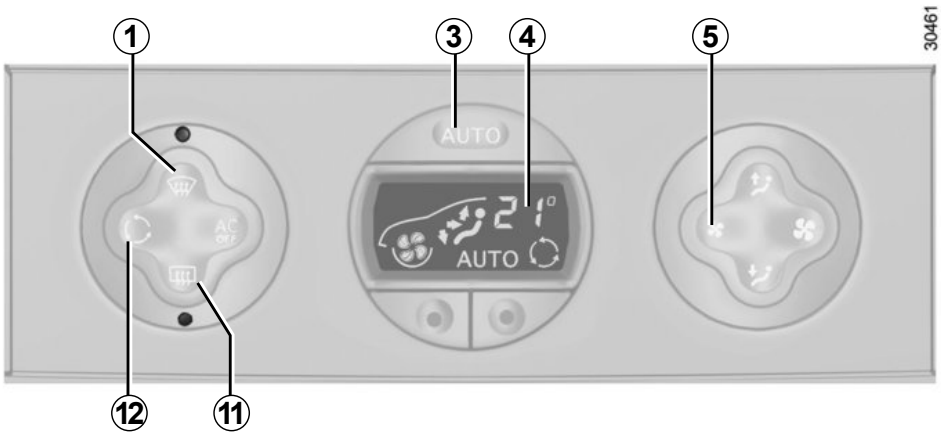

Clear View function

Press button ***1***; the indicator lights in buttons ***1*** and ***11*** come on.

AUTO goes out on display ***4***.

This function rapidly demists/de-ices the windscreen, the front side windows and the door mirrors.

It imposes automatic operation of the air conditioning and heating of the rear screen and/or heated door mirrors, and inhibits air recirculation.

Press button ***11*** if you do not wish to switch on the heated rear screen and/or heated door mirrors.

Note: if you wish to reduce the air flow (which may produce a certain amount of noise in the passenger compartment), press button ***5***.

To exit this function, press:

– button ***1*** again;

– button ***3*** (AUTO lights up on the display).

Air recirculation

Pressing button ***12*** activates air recirculation (the symbol lights up on the display).

During recirculation, air is taken from the passenger compartment and is recycled, with no air being taken from outside the vehicle.

Air recirculation allows the external atmosphere to be cut off (when driving in polluted areas, etc.).

Prolonged use of the air recirculation mode may cause the windows to mist up or lead to odours, as the air is not renewed.

We therefore advise you to return to normal mode (external air) as soon as the air recirculation function is no longer required, by pressing button ***12*** again.

Downloaded from www.Manualslib.com manuals search engine

AIR CONDITIONING: information and advice on use

Advice on use

In some situations, (air conditioning off, air recirculation activated, ventilation speed at zero or low, etc.) you may notice that condensation starts to form on the windows and windscreen.

If there is condensation, use the **"Clear View"** function to remove it, then use the air conditioning in automatic mode to stop it forming again.

Maintenance

Refer to the Maintenance Document for your vehicle for the inspection frequency.

Do not add anything to the vehicle's ventilation circuit (for example, to remove bad odours).

There is a risk of damage or of fire.

Fuel consumption

You will normally notice an increase in fuel consumption (especially in town) when the air conditioning is operating.

For vehicles fitted with air conditioning with no automatic mode, switch off the system when it is not required.

Advice for reducing consumption and helping to preserve the environment

Drive with the air vents open and the windows closed.

If the vehicle has been parked in the sun, open the doors for a few moments to let the hot air escape before starting the engine.

Operating faults

As a general rule, contact your approved dealer in the event of an operating fault.

– **Reduction in de-icing, demisting or air conditioning performance.** This may be caused by the passenger compartment filter cartridge becoming clogged.

– **No cold air is being produced**. Check that the controls are set correctly and that the fuses are sound. Otherwise, switch off the system.

Presence of water under the vehicle

After prolonged use of the air conditioning system, it is normal for water to be present under the vehicle. This is caused by condensation.

Do not open the refrigerant fluid circuit. The fluid may damage eyes or skin.

Downloaded from www.Manualslib.com manuals search engine

WINDOWS (1/2)

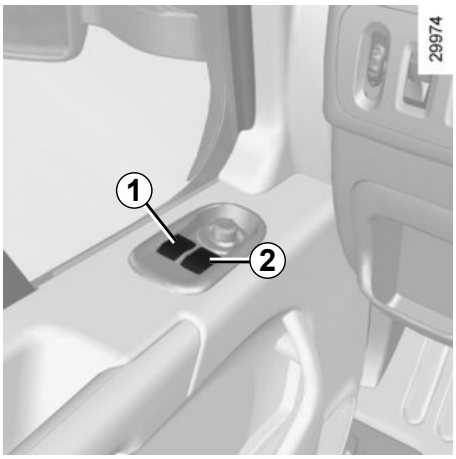

Electric windows

With the ignition on:

– press the switch for the window concerned to lower it to the desired height;

– lift the switch for the window concerned to raise it to the desired height.

From the driver's seat

Operate the switches as follows:

– ***1*** for the driver's side;

– ***2*** for the front passenger side.

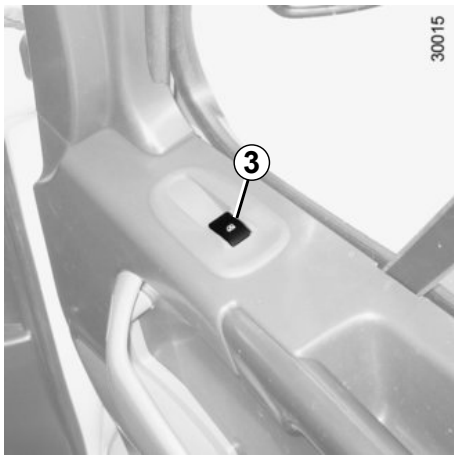

From the front passenger seat

Press switch ***3***.

Avoid resting any objects against a half-open window: there is a risk that the electric window winder could be damaged.

Driver's responsibility

Never leave your vehicle with the key, remote control or transmitter-receiver inside, and never leave a child, adult who is not self-sufficient or a pet, even for a short while. They may pose a risk to themselves or to others by starting the engine or activating equipment (such as the gear lever or electric windows). If any part of the body becomes trapped, reverse the direction of the window immediately by pressing the relevant switch.

Risk of serious injury.

Downloaded from www.Manualslib.com manuals search engine

WINDOWS (2/2)

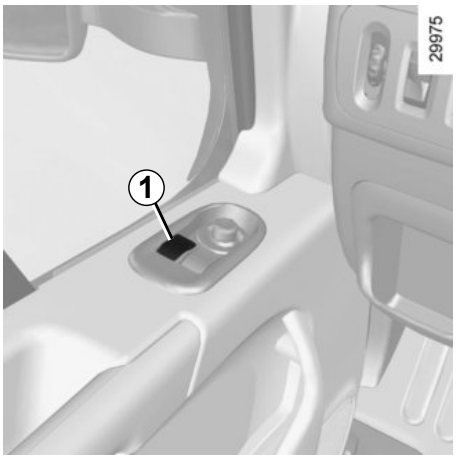

One-touch electric window

The one-touch mode works in addition to the operation of the electric windows described previously.

It is fitted to the driver's window and is used for lowering only.

Briefly press switch ***1***: the window lowers completely.

Pressing the switch again while the window is moving will stop its movement.

When closing the windows, ensure that no part of the body (arm, hand, etc.) is protruding from the vehicle.

Risk of serious injury.

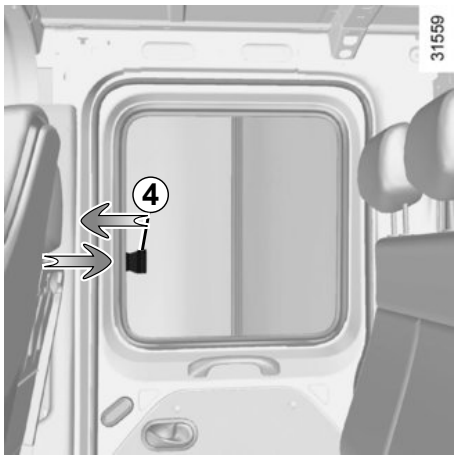

Sliding rear windows

Press the tab ***4*** and slide the window.

Downloaded from www.Manualslib.com manuals search engine

INTERIOR LIGHTING

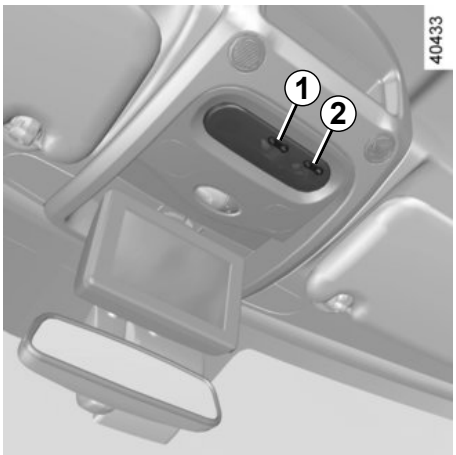

Courtesy light

Use switch ***1*** to:

– permanent lighting;
– intermittent lighting, which comes on when a door is opened. It goes out when the doors concerned are properly closed;
– immediate switching off.

Map reading lights

(depending on the vehicle)

Move switch **2**.

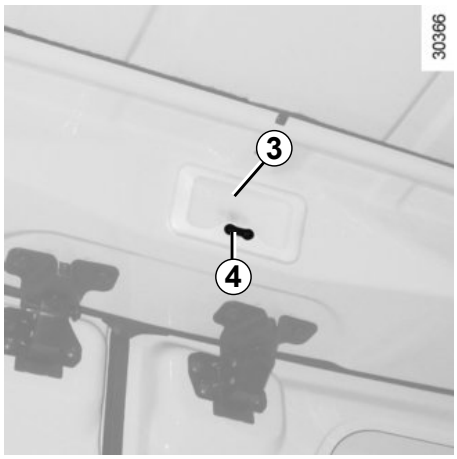

Rear light *3*

Turn switch ***4*** to:

– switch on continuous lighting;
– switch on intermittent lighting when one of the rear doors is opened. The lights only go out when the doors are correctly closed;
– force the lights off.

Note

Remote unlocking of the doors triggers timed lighting of the passenger compartment.

If one of the front or rear doors is opened, the timed lighting will start again.

Then the courtesy light and the luggage compartment light dim and go out. The lighting timer will cut out for various reasons:

– if a door has been open for 15 minutes;
– if all the doors have been closed for 15 seconds:
– when the ignition is switched on.

Downloaded from www.Manualslib.com manuals search engine

SUN VISOR, GRAB HANDLE

Sun visor

Lower sun visor ***1***.

The sun visor can be swung round against the door window.

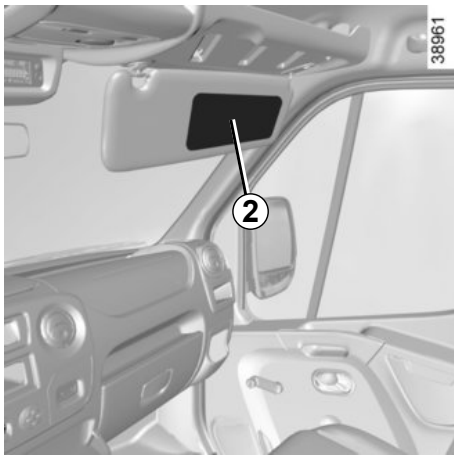

Courtesy mirror or additional rear-view mirror *2*

(depending on the vehicle)

Lower the sun visor to access the mirror.

Special feature of the additional rear-view mirror

See “Rear view mirrors” in Section 1.

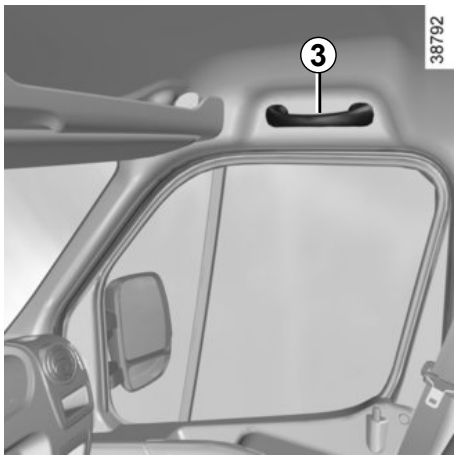

Grab handle *3*

This offers support and can be held when the vehicle is being driven.

Do not use it for getting into or out of the vehicle.

Downloaded from www.Manualslib.com manuals search engine

ASHTRAY/CIGAR LIGHTER/ACCESSORIES SOCKET

Ashtray *2*

(depending on vehicle)
This is a removable ashtray which can be placed in the cup holders.
Lift the cover to open.
To empty it, pull the assembly. The ashtray will come out of its housing.

Cigar lighter *1*

(depending on vehicle)
With the ignition on, push in cigar lighter ***1***, it will spring back with a click when it is ready. Pull it out to use. After use, replace it without pushing it all the way in.

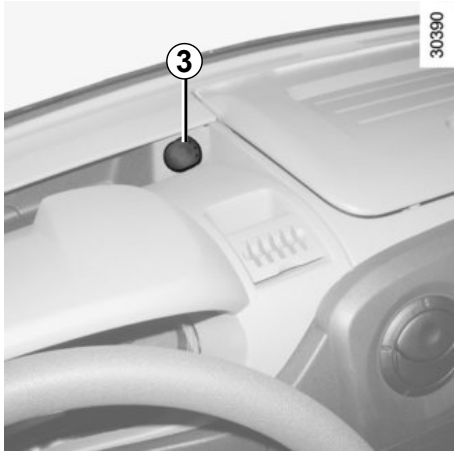

Accessories socket *1* and *3*

(depending on vehicle)

They are designed for connecting accessories with a maximum power rating of 120 Watts (voltage: 12V) which have been approved by our Technical Department.

If your vehicle is not fitted with a cigar lighter and an ashtray, these can be obtained from an approved Dealer.

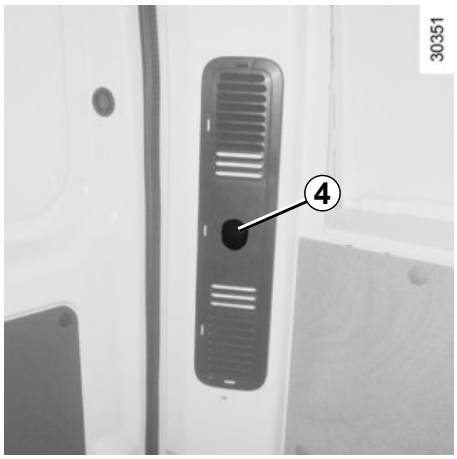

Accessories socket *4* (in the luggage compartment)

Connect accessories with a maximum power of 120 watts (12 V) only.
When several accessory sockets are used at the same time, the total power of the connected accessories must not exceed 180 watts.
Fire hazard.

Downloaded from www.Manualslib.com manuals search engine

PASSENGER COMPARTMENT STORAGE/FITTINGS (1/6)

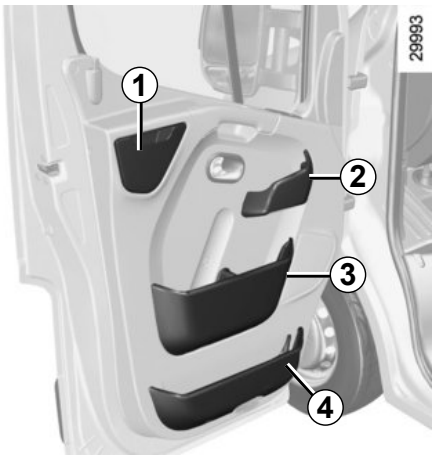

Front door storage compartments

Storage compartment *1*

Storage compartment *2*
Do not use it as a handle to close the door.

Storage compartment *3*
It can hold a 1.5 litre bottle.

Storage compartment *4*

Sun visor storage *5*

This can be used for storing motorway tickets, cards, etc.

Nothing should be placed on the floor area in front of the driver as such objects may slide under the pedal during braking manoeuvres, thus obstructing its use.

Ensure that no hard, heavy or pointed objects are placed in the open storage compartments in such a way that they may fall on any passengers during sudden turning, braking or in the event of an accident.

Downloaded from www.Manualslib.com manuals search engine

Cup holder *6*, *13* and *17*

These can be used to hold cups or the ashtray.

When turning corners, accelerating or braking, ensure that the receptacle being held by the cup holder is not dislodged.

There is a risk of burning if hot liquid escapes.

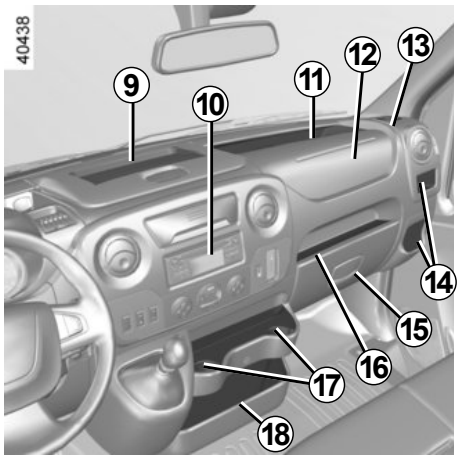

Dashboard storage compartments *7*, *8*, *9*, *11*, *14*, *16* and *18*

Location for storage compartment or radio *10*

Ensure that no hard, heavy or pointed objects are placed in the open storage compartments in such a way that they may fall on any passengers during sudden turning, braking or in the event of an accident.

Location for storage compartment or passenger air bag *12*

Glove compartment *15*

Pull the handle to open it.

It can hold A4 size documents, a 2 litre bottle of water etc.

Depending on the vehicle, it may be ventilated and refrigerated.

Always leave the storage compartment cover closed when you are driving:

– there is a risk of injury when braking suddenly or in the event of an accident;

– there is a risk of objects being hurled through the passenger compartment.

Downloaded from www.Manualslib.com manuals search engine

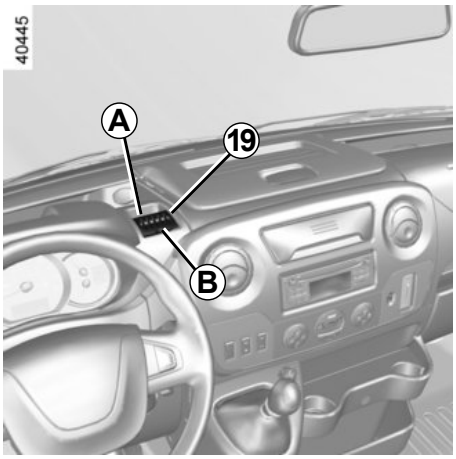

Token holder and card holder *19*

Token holder *A*

Card holder *B*
This can be used for storing motorway tickets, cards, etc.

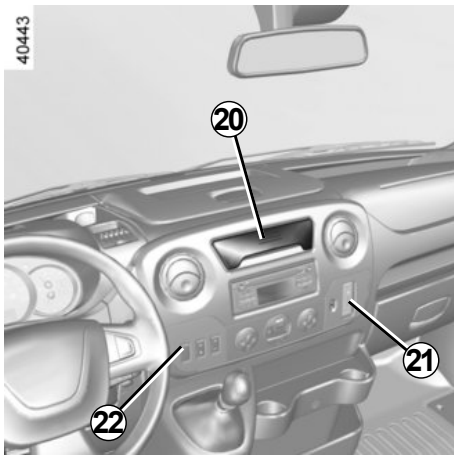

Location for storage compartment or tray *20*

Location for storage compartment or sockets for audio multiconnection unit *21*

Location for storage compartment or switches *22*

Dashboard upper storage compartment *23*
To open it, lift the handle.

Nothing should be placed on the floor area in front of the driver as such objects may slide under the pedal during braking manoeuvres, thus obstructing its use.

Downloaded from www.Manualslib.com manuals search engine

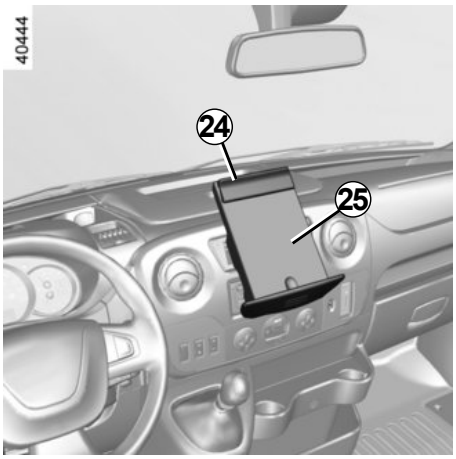

Tray *25*

Pull tray ***25*** fully towards you.

Turn it and push it fully.

You can use clip ***24*** to attach A5 format documents.

To refit it, pull the table tray fully towards you, lift it up until it is horizontal and push it in fully.

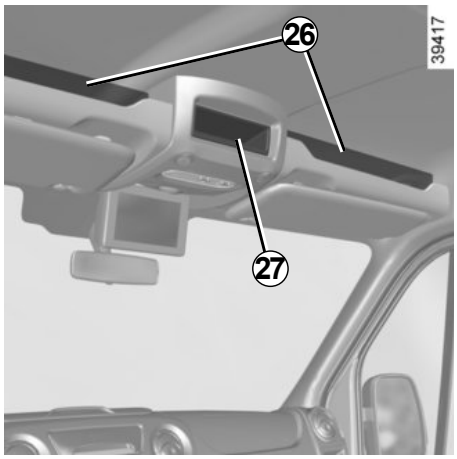

Upper cab storage compartment *26* and *27*

Reserved for the transport of objects only.

The total weight of upper cab storage compartment ***27*** must not exceed 5 kg.

Do not hang any heavy and/or sharp objects which may fall whilst driving. Risk of injury.

Nothing should be placed on the floor area in front of the driver as such objects may slide under the pedal during braking manoeuvres, thus obstructing its use.

Downloaded from www.Manualslib.com manuals search engine

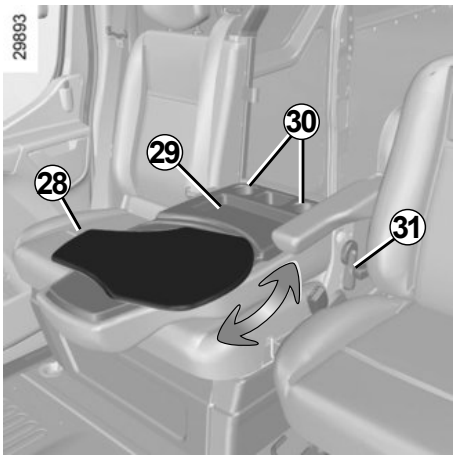

Tray

On equipped vehicles, lower the back of the centre seat by lifting control ***31***.

The back of the centre seat has the following features:

– a tray ***28*** which can be turned only to the driver's side (depending on the vehicle);
– a cup holder ***30***;
– storage compartment ***29***.

It is forbidden to sit in the centre seat if its seatback is folded down.

Note: make sure the tray is put back in place correctly before lifting the back of the centre seat. Check that the back of the centre seat is properly locked.

Ensure that nothing is obstructing the operation of the folding tray.

When turning corners, accelerating or braking, ensure that the receptacle being held by the cup holder is not dislodged.

There is a risk of burning if hot liquid escapes.

Ensure that no hard, heavy or pointed objects are placed in the open storage compartments in such a way that they may fall on any passengers during sudden turning, braking or in the event of an accident.

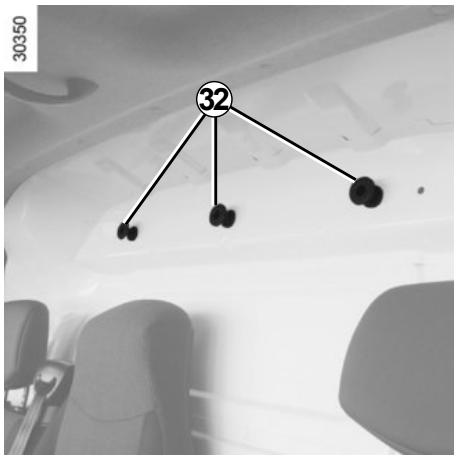

Clothes hooks *32*

Downloaded from www.Manualslib.com manuals search engine

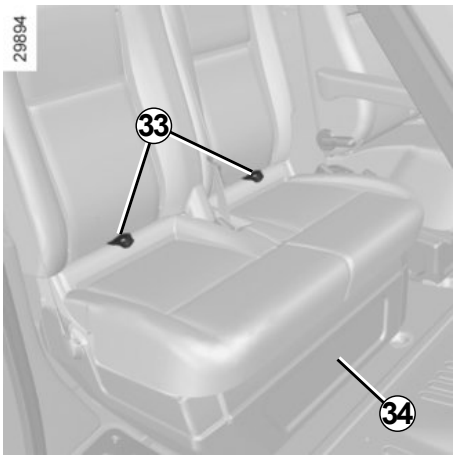

Storage compartment *34* underneath front bench seat

To access, pull tabs ***33***.

Always close the seat base when driving:

– there is a risk of injury when braking suddenly or in the event of an accident;

– there is a risk of objects being hurled through the passenger compartment.

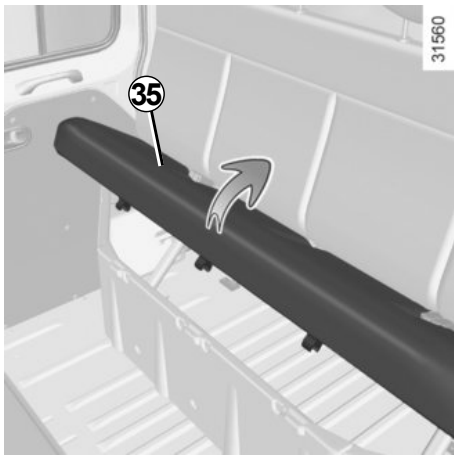

Storage compartment underneath rear bench seat

Seat base ***35*** lifts up to give access to a storage compartment underneath the bench seat.

Check that the rear seat belts are positioned and operating correctly each time the rear seats are moved.

Rear load area storage compartment *36*

Reserved for the transport of objects only.

The total weight of rear load area upper storage compartment must not exceed 35 kg.

Do not hang any heavy and/or sharp objects which may fall while you are driving. Risk of injury.

Downloaded from www.Manualslib.com manuals search engine

REAR BENCH SEATS (1/2)

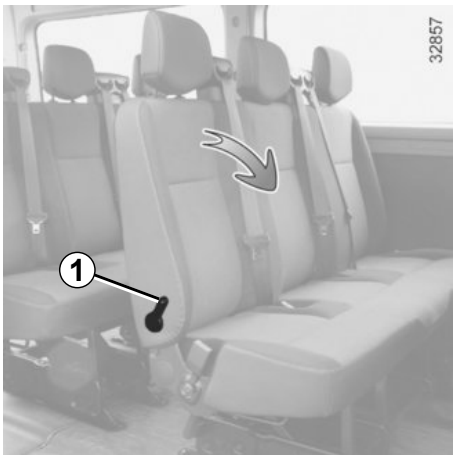

Access to the rear seats

Move the handle ***1*** backwards to lower the seat back.

To return the seat to its original position, bring the seatback back into position.

For safety reasons, carry out any adjustments when the vehicle is not being driven.

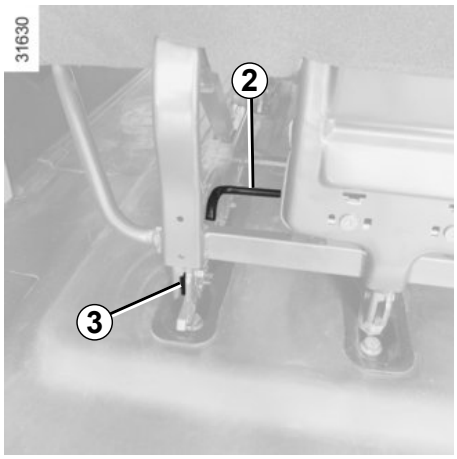

Removing the bench seat

Lift levers ***2*** situated behind each bench seat. The spigots ***3*** protrude to indicate that the bench seat is unlocked.

Pull the bench seat backwards to release the anchoring points, then lift it to remove it.

Removing the anchoring points is prohibited.

The bench seat is rather heavy (approximately 65 kg). For your own safety, please handle it carefully.

Risk of injury.

Downloaded from www.Manualslib.com manuals search engine

REAR BENCH SEATS (2/2)

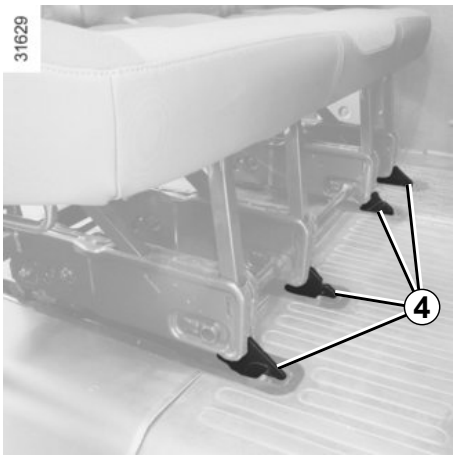

Refitting the rear bench seat

– Position the guides ***4*** on the rails set back in relation to the anchorage points;
– slide the bench seat forwards.

The bench seat will lock automatically.

Check that the red spigots ***3*** can no longer be seen.

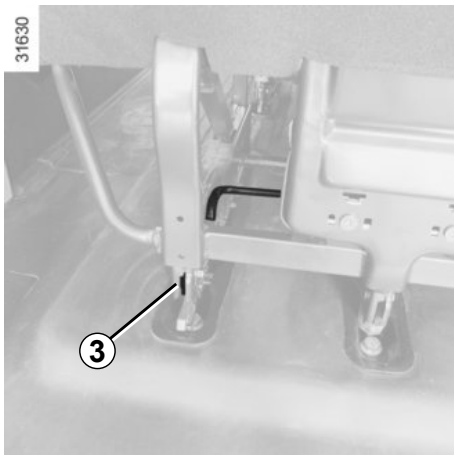

The rear bench seats must be placed on their original anchorage points.

Driving with the bench seat in a rear-facing position is prohibited.

The row bench seats in rows 2 and 3 are not interchangeable. Do not force them into position.

Risk of damage.

When moving the rear bench seat, check that the bench seat anchorage points are clean (they should be free from grit, cloths or any other item which may prevent the bench seat from locking securely).

Downloaded from www.Manualslib.com manuals search engine

MULTIMEDIA EQUIPMENT

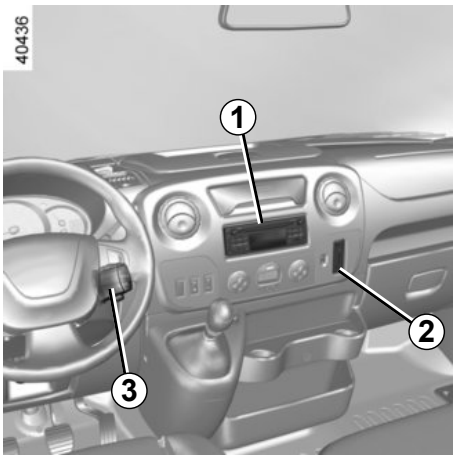

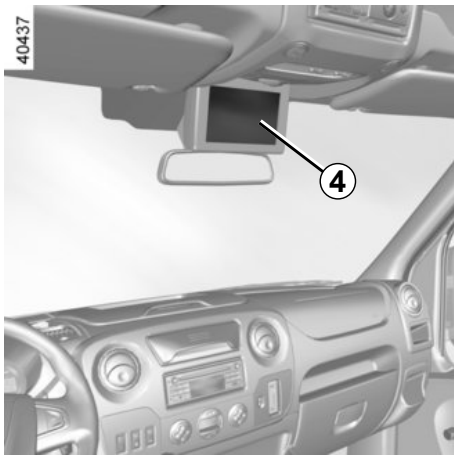

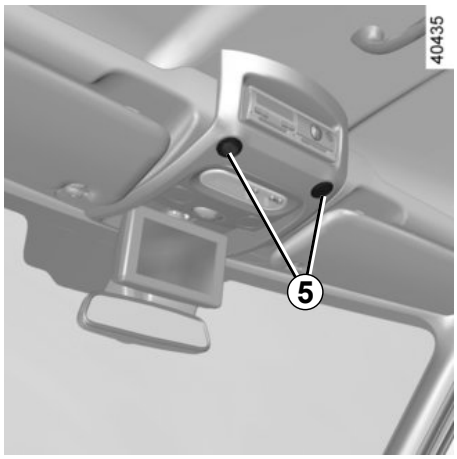

The presence and location of this equipment depends on the vehicle's multimedia equipment.

1 Radio;

2 Multimedia sockets;

3 steering column control;

4 multimedia touchscreen;

5 microphone.

To operate this equipment: please refer to the driver's handbook.

Using the telephone

We remind you of the need to conform to the legislation in force concerning the use of such equipment.

Downloaded from www.Manualslib.com manuals search engine

TRANSPORTING OBJECTS (1/2)

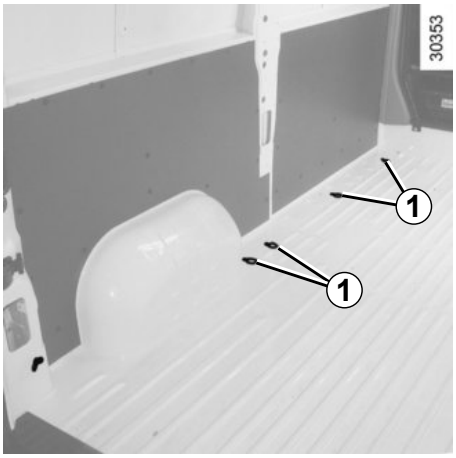

Transporting objects in the rear load area

Depending on the vehicle, securing rings ***1*** and ***2*** can be used to stop transported objects from moving. The number of rings and their position may vary depending on the vehicle.

The sole purpose of rings ***2*** is to prevent transported objects from moving. The objects must be secured to mounting rings ***1*** on the vehicle floor beforehand.

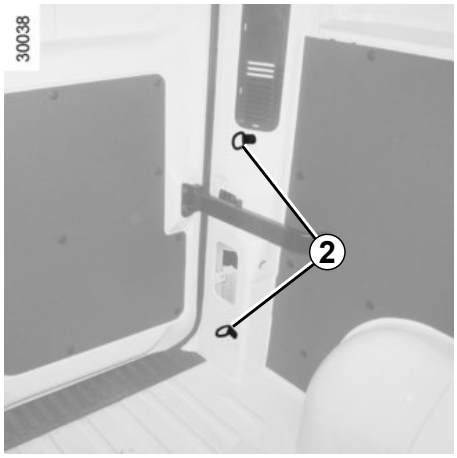

Always position the heaviest items directly on the floor. Use the lashing points on the floor of the luggage compartment, if these are fitted to the vehicle. The luggage should be loaded in such a way that no items will be thrown forward and strike the occupants if the driver has to brake suddenly. Fasten the rear seat belts, even if the seats are not occupied.

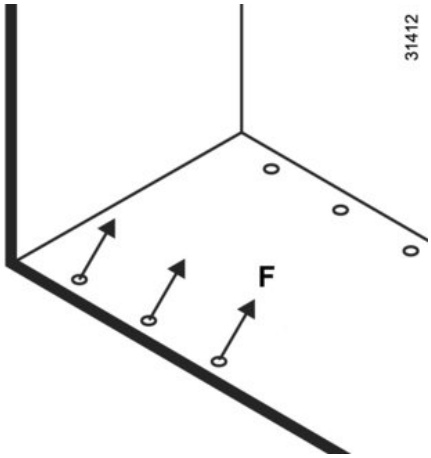

F max: 625 daN

Downloaded from www.Manualslib.com manuals search engine

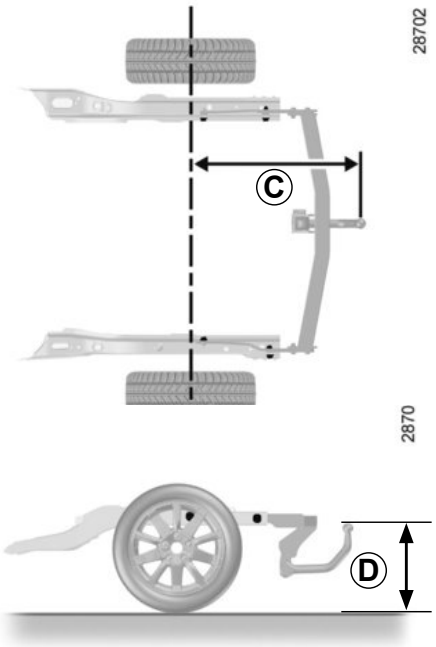

Front-wheel drive, standard wheels
***C* = 1,110 mm.**
Rear-wheel drive, standard wheels
***C* = 1,760 mm.**
Rear-wheel drive, dual wheels
***C* = 1,753 mm.**

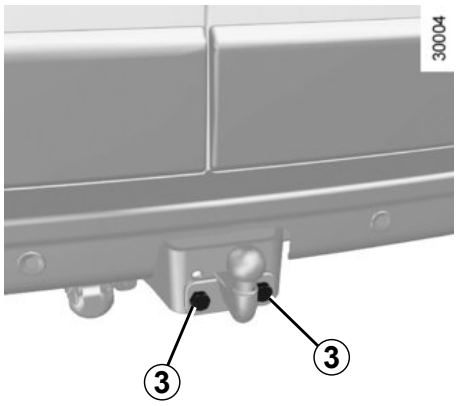

Towing

Fitting the towing ball

Position the ball within the range of height ***D***, which must be between 350 and 420 mm, with the vehicle laden. Tighten bolts ***3***, observing a tightening torque of 196 Nm (Newton metres).

Permissible nose weight, maximum permissible towing weight, braked and unbraked: refer to the information on “Weights” in Section 6.

Choice and fitting of towing equipment

Maximum weight of towing equipment: 26 kg

For fitting and conditions of use, refer to the equipment’s fitting instructions.

Please keep these instructions with the rest of the vehicle documentation.

If the towbar ball obscures the registration plate or the rear fog lights, it should be removed when not in use.

In all cases, comply with local legislation.

Downloaded from www.Manualslib.com manuals search engine

3.30

Downloaded from www.Manualslib.com manuals search engine

Section 4: Maintenance

Bonnet 4.2
Engine oil level 4.4
Engine oil level: topping up/filling 4.6
Levels 4.8
brake fluid 4.8
Coolant 4.9
Power-assisted steering pump 4.10
windscreen washer reservoir 4.10
Filters 4.10
Tyre Pressure 4.11
Battery 4.13
Bodywork maintenance 4.14
Interior trim maintenance 4.16

Downloaded from www.Manualslib.com manuals search engine

BONNET (1/2)

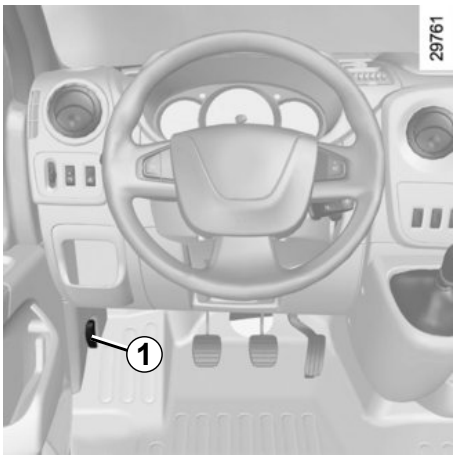

To open the bonnet, pull handle ***1***.

Unlocking the bonnet catch

To unlock, pull control ***2***.

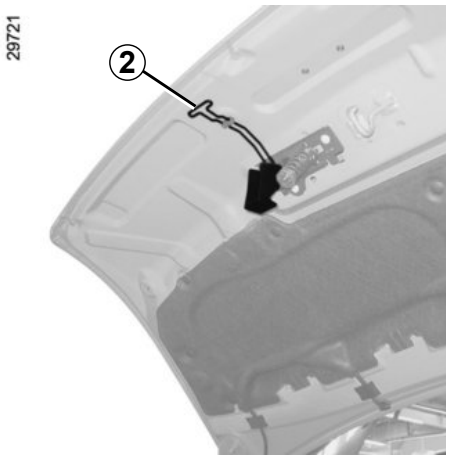

The engine may be hot when carrying out operations in close proximity. In addition, the engine cooling fan can come on at any moment.

Risk of injury.

In the event of even a slight impact involving the radiator grille or bonnet, have the bonnet lock checked by an authorised dealer as soon as possible.

Downloaded from www.Manualslib.com manuals search engine

BONNET (2/2)

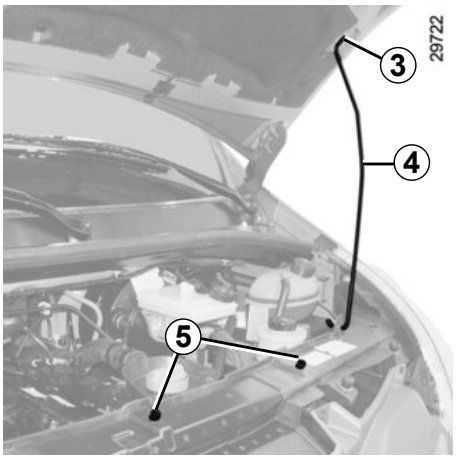

Opening the bonnet

Lift the bonnet and release stay ***4*** from its holders ***5***. For your own safety, it is **essential** to fix the stay into retainer ***3*** in the bonnet.

After any procedure in the engine compartment, make sure that you do not forget anything (cloth, tools, etc.).

Otherwise, this may lead to engine damage or cause a fire.

Closing the bonnet

Ensure that the windscreen wiper blades are correctly positioned.

Place stay ***4*** back into its holders ***5***, hold the bonnet in the middle and lower it to 20 cm above the closed position, then release it. It will latch automatically under its own weight.

Ensure that the bonnet is properly locked.

Check that nothing is preventing the catch from locking (gravel, cloth, etc.).

Downloaded from www.Manualslib.com manuals search engine

ENGINE OIL LEVEL: general information (1/2)

It is normal for an engine to use oil for lubrication and cooling of moving parts and it is normal to top up the level between oil changes.

However, contact an approved Dealer if more than 0.5 litres is being consumed every 600 miles (1,000 km) after the running in period.

Oil change frequency: check the oil level from time to time and certainly before any long journey to avoid the risk of damaging your engine.

Reading the oil level

The oil level should be read with the vehicle on level ground, after the engine has been switched off for some time.

The dipstick must be used to read the exact oil level and make sure that the maximum level has not been exceeded (risk of engine damage). Refer to the following pages.

The instrument panel display only alerts the driver when the oil level is at its minimum.

Minimum oil level display *A*

If the level is above the minimum level

The “OIL LEVEL” message appears on the display, accompanied by squares indicating the level. These squares disappear as the level drops and they are replaced by dashes.

To switch to trip computer reading, press button ***1*** or ***2*** again.

If the level is at the minimum

The “TOP-UP OIL LEVEL” message and warning light are displayed on the instrument panel.

It is vital to top up the oil as soon as possible.

The display only warns the driver if the oil level is at the minimum level. It does not inform the driver that the oil level has exceeded the maximum level as this can only be measured using a dipstick.

Downloaded from www.Manualslib.com manuals search engine

ENGINE OIL LEVEL: general information (2/2)

29990

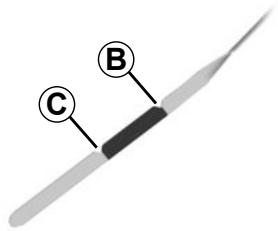

Reading the level using the dipstick

Engine switched off:
- remove the dipstick and wipe with a clean, lint-free cloth;
- push the dipstick in as far as it will go;
- take out the dipstick again;
  read the level: it should never fall below minimum mark ***C*** or exceed maximum mark ***B***.

Once the level has been read, push the dipstick in as far as it will go.

Maximum engine oil level exceeded.

The oil level should only be read with the dipstick as explained above.

If the oil level exceeds the maximum level, **do not start your vehicle** and contact an approved Dealer.

Deactivate the Stop and Start function for any operation performed in the engine compartment.

Under no circumstances should maximum filling level ***B*** be exceeded: this could damage the engine and the catalytic converter.

Consult your approved Dealer at once if you notice an abnormal or repeated drop in any of the fluid levels.

In order to prevent splashback, it is recommended that a funnel be used when topping up/filling with oil.

The engine may be hot when carrying out operations in close proximity. In addition, the engine cooling fan can come on at any moment.

Risk of injury.

Downloaded from www.Manualslib.com manuals search engine

ENGINE OIL LEVEL : topping up/filling (1/2)

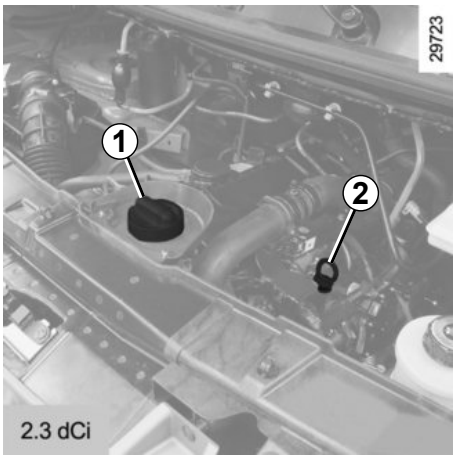

Topping up/filling

The vehicle must be parked on level ground and the engine should be cold (for instance, before the engine is started up for the first time in the day).

Engine oil grade

Refer to the Maintenance Document for your vehicle.

Do not exceed the **MAX** level and do not forget to refit cap ***1*** and dipstick ***2***.

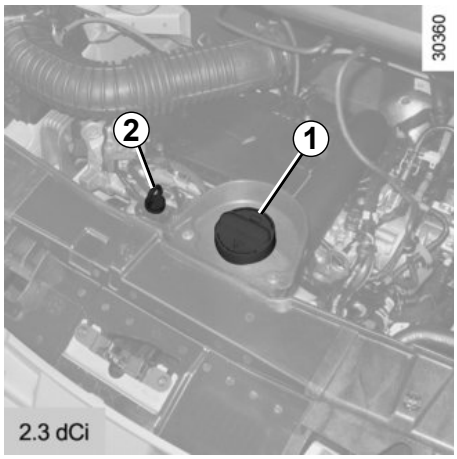

– Unscrew cap ***1***;

– top up the level (as a guide, the capacity between the minimum and maximum reading on the dipstick ***2*** is between 1.5 and 2 litres, depending on the engine);

– wait for approximately 10 minutes to allow the oil to drain;

– check the level using the dipstick ***2*** (as described above).

Once the level has been read, push the dipstick in as far as it will go.

Oil change

Service interval: refer to the Maintenance Service Booklet for your vehicle.

Oil change capacity

Please refer to the maintenance document for your vehicle, or contact an authorised dealer.
Always check the engine oil level using the dipstick, as explained previously (it should never fall below the minimum level, or be over the maximum level on the dipstick).

Engine oil grade

Refer to the Maintenance Service Booklet for your vehicle.

In order to prevent splashback, it is recommended that a funnel be used when topping up/filling with oil.

Downloaded from www.Manualslib.com manuals search engine

ENGINE OIL LEVEL : topping up/filling (2/2)

Filling: take care when topping up the oil that no oil drips onto engine components - risk of fire. Remember to refit the cap securely as there is a risk of fire if oil splashes onto hot engine components.

Deactivate the Stop and Start function for any operation performed in the engine compartment.

Engine oil change: if you are changing the oil when the engine is hot, be careful not to scald yourself if the oil overflows.

Consult your approved Dealer at once if you notice an abnormal or repeated drop in any of the fluid levels.

Never run the engine in an enclosed space as exhaust gases are poisonous.

The engine may be hot when carrying out operations in close proximity. In addition, the engine cooling fan can come on at any moment.

Risk of injury.

Downloaded from www.Manualslib.com manuals search engine

LEVELS (1/3)

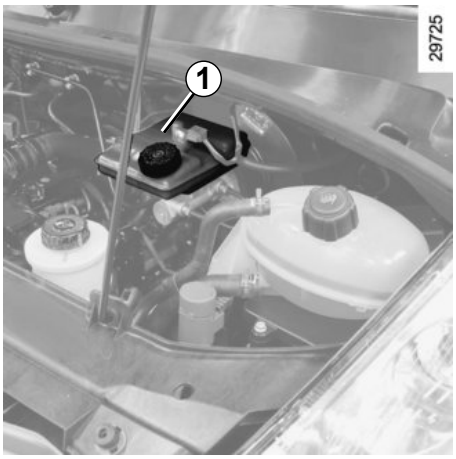

Brake fluid

This should be checked frequently, and immediately if you notice even the slightest loss in braking efficiency.

The level should be read with the engine switched off and on level ground.

The engine may be hot when carrying out operations in close proximity. In addition, the engine cooling fan can come on at any moment.

Risk of injury.

Level *1*

It is normal for the level to drop as the linings become worn, but it should never drop below the **"MIN"** warning line.

If you wish to check the disc and drum wear yourself, you should obtain the document explaining the checking procedure from our network or from the manufacturer's website.

Filling

After any operation on the hydraulic circuit, a specialist must replace the fluid.

Only use fluids approved by our Technical Department (and taken from a sealed container).

Replacement intervals

Refer to the Maintenance Document for your vehicle.

Consult your approved dealer at once if you notice an abnormal or repeated drop in any of the fluid levels.

Deactivate the Stop and Start function for any operation performed in the engine compartment.

Downloaded from www.Manualslib.com manuals search engine

Coolant

With the engine switched off and on level ground, the level **when cold** must be between the "**MIN**" and "**MAX**" marks on coolant reservoir ***2***.

Top this level up **when cold** before the "**MIN**" mark is reached.

Consult your approved dealer at once if you notice an abnormal or repeated drop in any of the fluid levels.

Frequency of checking coolant level

Check the coolant level regularly (very severe damage is likely to be caused to the engine if it runs out of coolant).

If the level needs to be topped up, only use products approved by our Technical Department which ensure:

– protection against freezing;

– anticorrosion protection of the cooling system.

Replacement intervals

Refer to the Maintenance Document for your vehicle.

No operations should be carried out on the cooling circuit when the engine is hot.

Risk of burns.

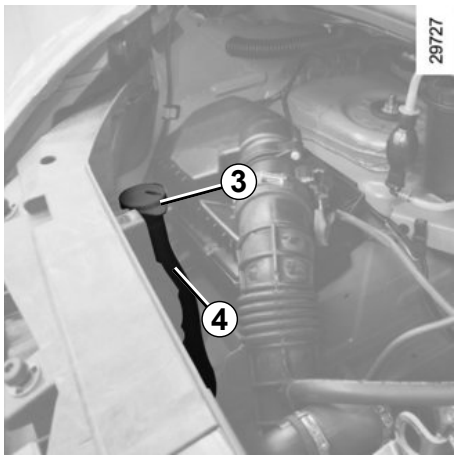

Windscreen washer reservoir *4*

Filling

With the engine switched off, open cap ***3***, fill until you can see the fluid, then refit the cap.

Fluid

Special windscreen washer fluid (product with antifreeze in winter).

Downloaded from www.Manualslib.com manuals search engine

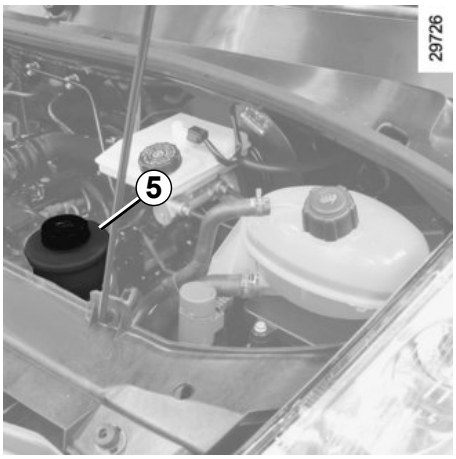

Power-assisted steering pump

Level: the correct level **when cold**, with the engine switched off and on level ground, should be visible between the "**MIN**" and "**MAX**" levels on reservoir ***5***.

For topping up or refilling with oil, use products approved by our Technical Department.

Deactivate the Stop and Start function for any operation performed in the engine compartment.

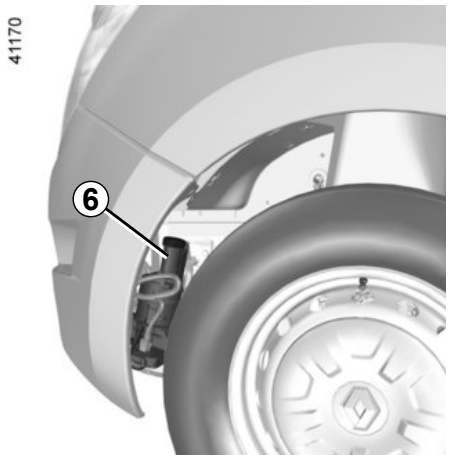

Special feature on vehicles fitted with a tank *6*

Access to the filler cap is not accessible. Contact an approved dealer for topping up or filling.

The engine may be hot when carrying out operations in close proximity. In addition, the engine cooling fan can come on at any moment.

Risk of injury.

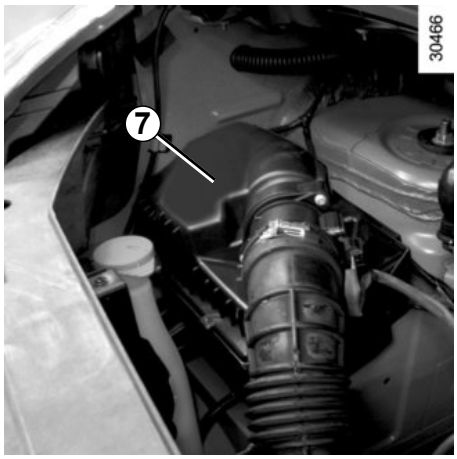

Filters

The filter elements (air filter, diesel filter, etc.) should be replaced during the maintenance operations carried out on your vehicle.

Replacement intervals for filter elements: refer to the Maintenance Document for your vehicle.

On equipped vehicles, if warning light ***7*** turns red, it indicates that the air filter is clogged.

Consult your approved dealer as soon as possible.

Downloaded from www.Manualslib.com manuals search engine

TYRE PRESSURE (1/2)

Label *A*

Open the driver's door to read it.

Tyre pressures should be checked when the tyres are cold.

If the tyre pressures cannot be checked when the tyres are **cold**, increase the pressures from **0.2** to **0.3** bar (or **3 PSI**). **Never deflate a hot tyre.**

Vehicle fitted with a tyre pressure loss warning system

If underinflated (puncture, low pressure, etc.), the warning light on the instrument panel comes on, see "Tyre pressure loss warning system" in Section 2.

For your safety, please respect the speed limit.

When they need to be replaced, only tyres of the same make, size, type and profile should be used on a single axle.

They must: either have a load capacity and speed rating at least equal to those of the original tyres, or conform to those recommended by an authorised dealer.

Failure to heed these instructions could endanger your safety and affect your vehicle's roadworthiness.

Risk of loss of control of the vehicle.

Downloaded from www.Manualslib.com manuals search engine

TYRE PRESSURE (2/2)

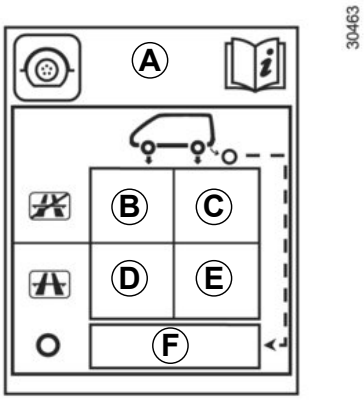

Zone ***B***: tyre pressures for the front wheels (non-motorway).

Zone ***C***: tyre pressures for the rear wheels (non-motorway).

Zone ***D***: tyre pressures for the front wheels (motorway).

Zone ***E***: tyre pressures for the rear wheels (motorway).

Zone ***F***: tyre pressure for the emergency spare wheel.

Tyre safety and use of snow chains

Refer to the information on “Tyres” in Section 5 for the servicing conditions and, depending on the version, the use of chains.

Special note

For vehicles used fully laden (maximum permissible all-up weight) **and towing a trailer.** The maximum speed must be limited to **60 mph (100 km/h)** and the tyre pressure increased by **0.2 bar.**

Refer to the information on “Weights” in Section 6.

Downloaded from www.Manualslib.com manuals search engine

BATTERY

This is located behind step ***A*** and does not require maintenance. **You should not open it or add any fluid**.

Depending on the vehicle, a system continuously checks the battery charge status.

When the ignition is off, some consumers may also be switched off (dipped beam headlights, radio, ventilation, etc.). On the instrument panel, the message “BATTERY MODE: ECONOMY” appears when switched off. When the level is extremely low, the message “BATTERY LOW START ENGINE” is displayed.
The charge status of the battery can decrease, especially if you use your vehicle:
– for short journeys;
– for driving in town;
– when the temperature drops;
– with the vehicle stopped and the engine off.

Replacing the battery
As this operation is complex, we advise you to contact an approved Dealer.

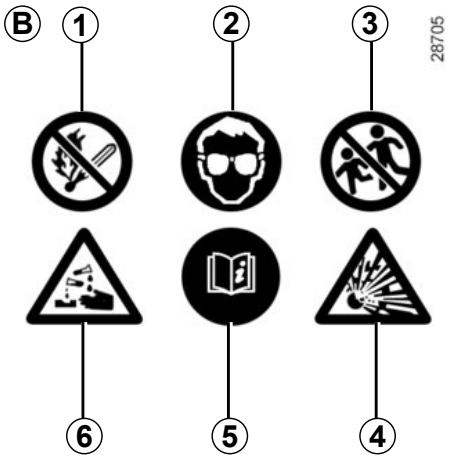

Label *B*
Observe the indications on the battery:
– ***1*** naked flames and smoking are forbidden;
– ***2*** eye protection required;
– ***3*** keep away from children;
– ***4*** explosive materials;
– ***5*** refer to the handbook;
– ***6*** corrosive materials.

Handle the battery with care as it contains sulphuric acid, which must not come into contact with eyes or skin. If it does, wash the affected area with plenty of cold water. If necessary, consult a doctor.

Ensure that naked flames, red hot objects and sparks do not come into contact with the battery as there is a risk of explosion.

The battery is a **specific type**, please ensure it is replaced with the same type. Consult an approved dealer.

Downloaded from www.Manualslib.com manuals search engine

BODYWORK MAINTENANCE (1/2)

A well-maintained vehicle will last longer. It is therefore recommended to maintain the exterior of the vehicle regularly.

Your vehicle has been treated with very effective anti-corrosion products. It is nevertheless subject to various outside influences.

Corrosive agents in the atmosphere
- atmospheric pollution (built-up and industrial areas),
- saline atmospheres (near the sea, particularly in hot weather),
- seasonal and damp weather conditions (e.g. road salt in winter, water from road cleaners, etc.).

Minor impacts

Abrasive action
Dust and sand in the air, mud, road grit thrown up by other vehicles, etc.

You should take a number of minor precautions in order to safeguard your vehicle against such risks.

What you should not do

Do not degrease or clean mechanical components (e.g. the engine compartment), underneath the body, parts with hinges (e.g. inside the doors) and painted plastic external fittings (e.g. bumpers) using high-pressure cleaning equipment or by spraying on products not approved by our Technical Department. Doing this could give rise to corrosion or operational faults.

Wash the vehicle in bright sunlight or freezing temperatures.

Do not scrape off mud or dirt without pre-wetting.

Allow dirt to accumulate on the exterior.

Allow rust to form following minor impacts.

Do not use solvents not approved by our Technical Department to remove stains as this could damage the paintwork.

Do not drive in snow or muddy conditions without washing the vehicle, particularly under the wheel arches and body.

You should

Wash your car frequently, **with the engine off**, with cleaning products recommended by the manufacturer (never use abrasive products). Rinse thoroughly beforehand with a jet:
- spots of tree resin and industrial grime;
- mud in the wheel arches and underneath the body which forms damp patches;
- **bird droppings**, which cause a chemical reaction with the paint that **rapidly discolours paintwork and may even cause the paint to peel off;**
  wash the vehicle **immediately** to remove these marks since it is impossible to remove them by polishing;
- salt, particularly in the wheel arches and underneath the body after driving in areas where the roads have been gritted.

Downloaded from www.Manualslib.com manuals search engine

BODYWORK MAINTENANCE (2/2)

Respect local regulations about washing vehicles (e.g. do not wash your vehicle on a public highway).

Observe the vehicle stopping distances when driving on gravelled surfaces to prevent paint damage.

Repair, or have repaired quickly, areas where the paint has been damaged, to prevent corrosion spreading.

Remember to visit the body shop periodically in order to maintain your anti-corrosion warranty. Refer to the Maintenance Document.

If it is necessary to clean mechanical components, hinges, etc., spray them with products approved by our Technical Department to protect them after they have been cleaned.

We have selected special products to care for your vehicle and you can obtain these from the manufacturer's accessory outlets.

Vehicles with a matte paint finish

This type of paint requires certain precautions.

Do not do the following

- use wax-based products (polishing);
- rub too hard;
- wash the vehicle in a roller-type car wash;
- wash the vehicle using a high-pressure device;
- attach stickers to the paintwork (risk of leaving marks).

You should do the following

Wash the vehicle by hand using plenty of water, using a soft cloth or a gentle sponge.

Using a roller type car wash

Return the windscreen wiper stalk to the Park position (refer to the information on the "Windscreen washer, wiper" in Section 1). Check the mounting of external accessories, additional lights and mirrors, and ensure that the wiper blades are secured with adhesive tape. Remove the radio aerial mast if your vehicle is fitted with this equipment.
Remember to remove the tape and refit the antenna after washing.

Cleaning the headlights

As the headlights are made of plastic "glass", use a soft cloth or cotton wool to clean them. If this does not clean them properly, moisten the cloth with soapy water, then wipe clean with a soft damp cloth or cotton wool.
Finally, carefully dry off with a soft dry cloth.

Cleaning products containing alcohol must not be used.

Downloaded from www.Manualslib.com manuals search engine

INTERIOR TRIM MAINTENANCE (1/2)

A well-maintained vehicle will last longer. It is therefore recommended to maintain the interior of the vehicle regularly.

A stain should always be dealt with swiftly.

Whatever type of stain is on the trim, use **cold** (or warm) **soapy water with natural soap**.

Detergents (washing-up liquid, powdered products, alcohol-based products) should not be used.

Use a soft cloth.

Rinse and soak up the excess.

Glass instrument panel

(e.g.: instrument panel, clock, exterior temperature display, radio display, multimedia or multifunction display etc.)

Use a soft cloth (or cotton wool).
If this does not clean them properly, use a soft cloth (or cotton wool) slightly moistened with soapy water and then wipe clean with another soft damp cloth or cotton wool.
Finally, **carefully** dry off with a soft dry cloth.

Do not use products containing alcohol and/or spray fluids on the area.

Seat belts

These must be kept clean.
Use products selected by our Technical Department (Approved outlets) or warm, soapy water and a sponge and wipe with a dry cloth.
Detergents or dyes must not be used under any circumstances.

Textiles (seats, door trim, etc)

Vacuum-clean the textiles **regularly**.

Liquid stain

Use soapy water.

Dab lightly (never rub) with a soft cloth, rinse and remove the excess.

Solid or pasty stain

Carefully remove the excess solid or pasty material **immediately** with a spatula (working from the edges to the centre to avoid spreading the stain).
Clean as for a liquid stain.

Special instructions for sweets or chewing gum

Put an ice cube on the stain to solidify it, then proceed as for a solid stain.

For further recommendations for maintaining the interior, and/or for any unsatisfactory results, please see an authorised dealer.

Downloaded from www.Manualslib.com manuals search engine

INTERIOR TRIM MAINTENANCE (2/2)

Removal/replacing removable equipment originally fitted in the vehicle

If you need to remove equipment in order to clean the passenger compartment (for example, mats), always ensure that they are correctly refitted and are the right way around (the driver's mat should be fitted on the driver's side, etc.) and fit them with the components supplied with the equipment (for example, the driver mat should always be fixed using the pre-fitted mounting components).

With the vehicle stationary, always ensure that nothing will impede driving (anything obstructing the pedals, heel wedged by the mat etc.).

You should not:

You are strongly advised not to position objects such as deodorants, scents, etc. near air vents, as this could damage your dashboard trim.

You are strongly recommended not to use high-pressure or spray cleaning equipment inside the passenger compartment: use of such equipment could impair the correct functioning of the electrical or electronic components in the vehicle, or have other detrimental effects.

Downloaded from www.Manualslib.com manuals search engine

Downloaded from www.Manualslib.com manuals search engine

Section 5: Practical advice

Puncture 5.2
Emergency spare wheel 5.2
Tool kit 5.4
Tyre inflation kit 5.5
Wheel trims 5.11
Changing a wheel: hydraulic jack 5.13
Changing a wheel: jack 5.16
Tyres 5.18
Headlights (changing bulbs) 5.21
    front fog lights. 5.23
    Side lights. 5.24
    Rear lights 5.25
    Interior lighting 5.27
Fuses. 5.28
Battery: troubleshooting. 5.33
Key, radio frequency remote control: battery. 5.35
Hands-free access transmitter/receiver: battery 5.36
Replacing wiper blades 5.37
Towing 5.38
Fitting a radio. 5.40
Accessories 5.41
Operating faults 5.42

Downloaded from www.Manualslib.com manuals search engine

PUNCTURE, EMERGENCY SPARE WHEEL (1/2)

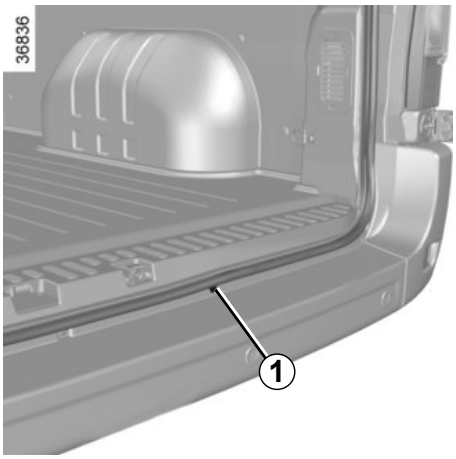

On equipped vehicles, this is located underneath the chassis.

If the emergency spare wheel has been stored for several years, have it checked by your dealer to ensure that it is safe to use.

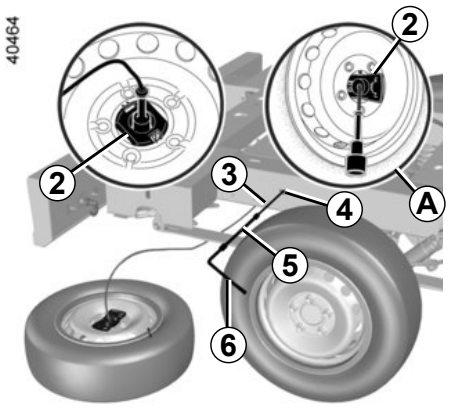

In some cases (puncture at the rear, vehicle with towing equipment, etc.) it may be necessary to lift the vehicle beforehand (via the lifting point closest to the affected wheel) to provide access to the emergency spare wheel (please refer to the information on “changing a wheel: vehicle with standard wheels” in Section 5).

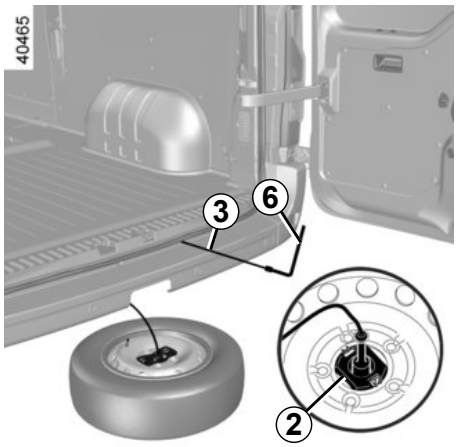

To remove the emergency spare wheel

– Insert the end of the unlocking key ***3*** extended (depending on the vehicle) by the hexagonal extension piece ***5*** and the wheelbrace ***6*** in location ***1*** or ***4*** (the use of other tools could damage the mechanism);

– lower the emergency spare wheel fully;

– unclip the component ***2*** on the wheel rim;

– thread the component ***2*** through the wheel rim (as shown in ***A***) to release the wheel.

Downloaded from www.Manualslib.com manuals search engine

PUNCTURE, EMERGENCY SPARE WHEEL (2/2)

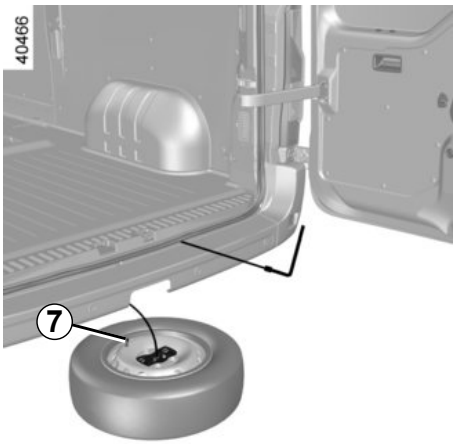

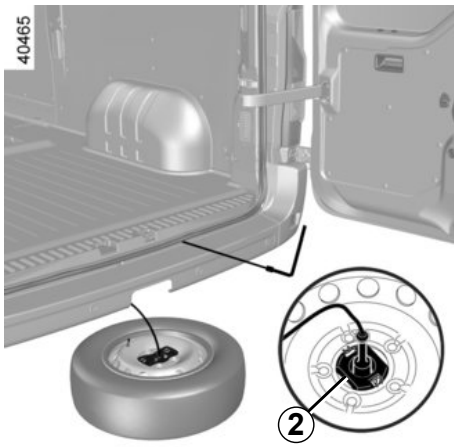

To fit a wheel

Proceed in the reverse order.

– place the wheel flat underneath the vehicle. The **valve *7* must be facing you**. Risk of losing the wheel;

– thread the cable and the component ***2*** through the wheel rim;

– centre the component ***2*** in the middle of the wheel and clip it to the wheel rim;

– lift the retaining cable up as far as it will go and check the wheel is completely secure.

Note: do not place a punctured wheel with aluminium wheel rims in the emergency spare wheel winch. Ensure the winch is refitted correctly.

Place the punctured wheel flat on the ground. The **valve *7* must be facing you.** Risk of losing the wheel.

Downloaded from www.Manualslib.com manuals search engine

TOOL KIT

Location of the tool kit

Tool kit ***1*** is located under the driver's seat.

To remove the tools, move the seat forward and fold down the seatback (please refer to the information on the "Front seats" in Section 1).

Nothing should be placed on the floor area in front of the driver as such objects may slide under the pedal during braking manoeuvres, thus obstructing its use.

Contents of the tool kit

(depending on the vehicle)

- hydraulic jack ***2***;
- towing hitch ***3***;
- hubcap tool ***4***;

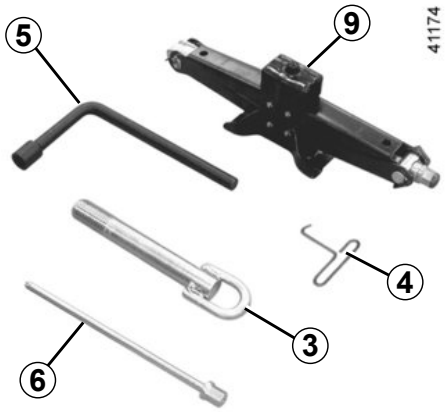

- wheelbrace ***5***;
- winch unlocking key ***6***;
- hexagonal extension piece ***7***;
- extension pieces ***8***;
- jack ***9***.

Do not leave the tools unsecured inside the vehicle as they may come loose under braking. After use, check that all the tools are correctly clipped into the tool kit, then position it correctly in its housing: risk of injury.

If wheel bolts are supplied in the tool kit, you must only use these bolts for the emergency spare wheel: refer to the label affixed to the emergency spare wheel. The jack is designed for wheel changing purposes only. Under no circumstances should it be used for carrying out repairs underneath the vehicle or to gain access to the underside of the vehicle.

Downloaded from www.Manualslib.com manuals search engine

TYRE INFLATION KIT (1/6)

The kit repairs tyres when tread ***A*** has been damaged by objects smaller than **4** mm. It cannot repair all types of puncture, such as cuts larger than **4** mm, or cuts in tyre sidewall ***B***.

Ensure also that the wheel rim is in good condition.

Do not attempt to use the inflation kit if the tyre has been damaged as a result of driving with a puncture.

You should therefore carefully check the condition of the tyre sidewalls before any operation.

Driving with underinflated, flat or punctured tyres can be dangerous and may make the tyre impossible to repair.

This repair is temporary

A tyre which has been punctured should always be inspected (and repaired, where possible) by a specialist.

When taking a tyre which has been repaired using this kit to be replaced, you must inform the specialist.

When driving, vibration may be felt due to the presence of the repair product injected into the tyre.

The kit is only approved for inflating the tyres of the vehicle originally equipped with the kit.

It must never be used to inflate the tyres of another vehicle, or any other inflatable object (rubber ring, rubber boat, etc.).

Avoid spillage on skin when handling the repair liquid bottle. If droplets do leak out, rinse them off with plenty of water.

Keep the repair kit away from children.

Do not dispose of the empty bottle in the countryside. Return it to your approved dealer or to a recycling organisation.

The bottle has a limited service life which is indicated on its label. Check the expiry date.

Contact an approved dealer to replace the inflation tube and repair product bottle.

Downloaded from www.Manualslib.com manuals search engine

TYRE INFLATION KIT (2/6)

Inflation kit *C*

Depending on the vehicle, in the event of a puncture, use inflation kit ***1*** located underneath the driver's seat.

Move the driver's seat forward and fold down the seatback to access the inflation kit.

Open it.

Screw compressor adapter ***3*** to container ***2*** and clip onto compressor ***D***.

The bottle must remain in an upright position.

Unscrew the valve cap on the tyre concerned.

Screw inflation adapter ***4*** onto the valve.

If the vehicle is parked on the hard shoulder, you must warn other road users of your vehicle's presence with a warning triangle or with other devices as per the legislation applying to the country you are in.

Before using this kit, park the vehicle at a sufficient distance from traffic, switch on the hazard warning lights, apply the handbrake, ask all passengers to leave the vehicle and keep them away from traffic.

Do not pull out the foreign body causing the puncture if it is still in the tyre.

Downloaded from www.Manualslib.com manuals search engine

TYRE INFLATION KIT (3/6)

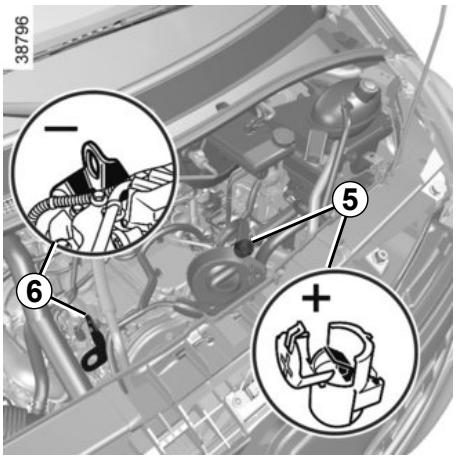

To connect the compressor, open the bonnet and connect black clamp ***10*** to earth ***6*** (refer to the information on “Battery: troubleshooting” in Section 5).

Then connect red clamp ***11*** to terminal ***5***.

Before starting the engine, check that the handbrake is applied and the gear lever is in neutral or in position **N** for sequential gearboxes.

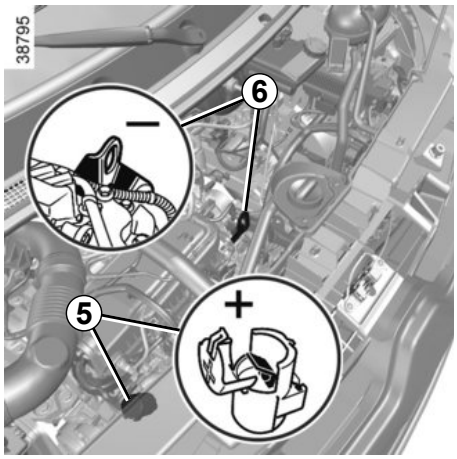

With the engine running, press switch ***7*** to start inflating.

After a maximum of **15** minutes, stop inflating and read the pressure on pressure gauge ***9***.

A pressure of at least 4.7 bar must be reached.

Note: whilst the cylinder is emptying (approximately 30 seconds), pressure gauge ***9*** will briefly indicate a pressure of up to 6 bar. Then the pressure drops.

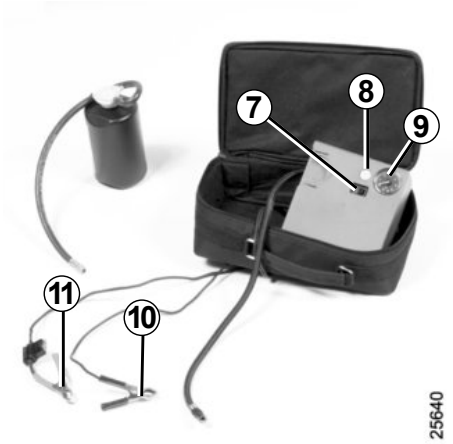

If the correct pressure cannot be achieved, repair is impossible. Do not drive the vehicle. Consult an approved dealer.

If the pressure is too high, press button ***8*** to lower the pressure.

Downloaded from www.Manualslib.com manuals search engine

TYRE INFLATION KIT (4/6)

Once the tyre is correctly inflated, remove the kit: slowly unscrew the inflation adapter ***3*** to prevent any repair product from escaping and screw tyre inflation hose ***4*** to bottle opening ***2*** to prevent the product from escaping.

Nothing should be placed around the driver's feet as such objects may slide under the pedals during sudden braking manoeuvres and obstruct their use.

Affix the driving recommendation label to the dashboard where it can easily be seen by the driver;

Store the kit underneath the driver's seat.

Start the vehicle immediately in order to the distribute the product in the tyre and, after **6 miles (10 km)** or **10** minutes driving, stop to check the pressure. To do this, fit adapter ***3*** onto the tyre valve. If the pressure is less than the recommended pressure, adjust it (refer to the information on "Tyre pressures"), otherwise contact an approved dealer: repair is not possible.

Precautions when using the kit

– the kit should not be operated for more than 15 consecutive minutes;

– when driving, vibration may be felt due to the presence of the repair product injected into the tyre.

Following repair with the kit, do not travel further than 120 miles (200 km). In addition, reduce your speed and under no circumstances exceed 48 mph (80 km/h). The sticker, which you must affix in a prominent position on the dashboard, reminds you of this.

Depending on the country or local legislation, a tyre repaired with the inflation kit may need to be replaced.

Please be aware that a poorly tightened or missing valve cap can make the tyres less airtight and lead to pressure loss.

Always use valve caps identical to those fitted originally and tighten them fully.

Downloaded from www.Manualslib.com manuals search engine

TYRE INFLATION KIT (5/6)

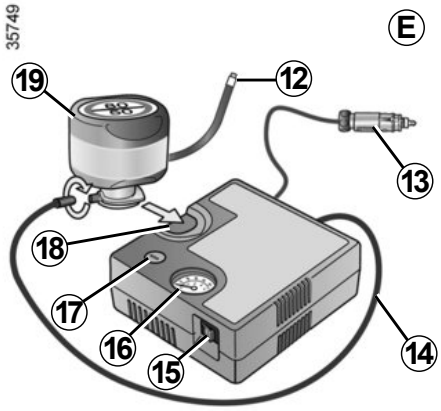

Inflation kit *E*

Depending on the vehicle, in the event of a puncture, use the inflation kit located underneath the driver's seat.

Before using this kit, park the vehicle at a sufficient distance from traffic, switch on the hazard warning lights, apply the handbrake, ask all passengers to leave the vehicle and keep them away from traffic.

With the engine running and the parking brake applied,

– unroll the hose from the container;

– connect the compressor hose ***14*** to the container's inlet ***19***;

– depending on the vehicle, connect the container ***19*** to the compressor from the container recess ***18***;

– unscrew the valve cap on the relevant wheel and screw on the container's inflation adapter ***12***;

– disconnect any accessories previously connected to the vehicle's accessories sockets;

– adapter ***13*** **must** be connected to the vehicle accessories socket;

– press switch ***15*** to inflate the tyre to the recommended pressure (please refer to the information in the section on "Tyre pressure");

– after a maximum of **15** minutes, stop inflating and read the pressure (on pressure gauge ***16***).

Note: while the container is emptying (approximately 30 seconds), the pressure gauge ***16*** will briefly indicate a pressure of up to **6** bar. The pressure will then drop.

– adjust the pressure: to increase it, continue inflation with the kit; to reduce it, press button ***17***.

If a minimum pressure of 1.8 bar is not reached after 15 minutes, repair is not possible; do not drive the vehicle but contact an approved dealer.

If the vehicle is parked on the hard shoulder, you must warn other road users of your vehicle's presence with a warning triangle or with other devices as per the legislation applying to the country you are in.

Downloaded from www.Manualslib.com manuals search engine

TYRE INFLATION KIT (6/6)

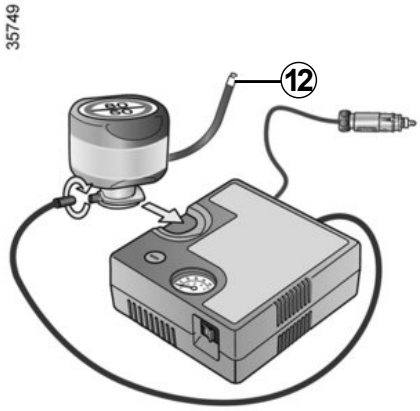

Once the tyre is correctly inflated, remove the kit: slowly unscrew the inflation adapter ***12*** to prevent any repair product from escaping and store the container in plastic packaging to prevent the product from escaping.

Nothing should be placed around the driver's feet as such objects may slide under the pedals during sudden braking manoeuvres and obstruct their use.

– Affix the driving recommendation label to the dashboard where it can easily be seen by the driver;
– Put the kit away.
– At the end of this initial inflation operation, air will still escape from the tyre. You must drive a short distance in order to seal the hole.
– Start immediately and drive at between 12 and 40 mph (20 and 60 km/h) in order to distribute the product evenly in the tyre and, after driving for 2 miles (3 km), stop and check the pressure.
– If the pressure is greater than 1.3 bar but less than the recommended pressure (refer to the label affixed to the edge of the driver's door), readjust it. Otherwise, please contact an authorised dealer: the tyre cannot be repaired.

Precautions when using the kit

The kit should not be operated for more than 15 consecutive minutes.

Please be aware that a poorly tightened or missing valve cap can make the tyres less airtight and may lead to pressure loss.

Always use valve caps identical to those fitted originally and tighten them fully.

Following repair with the kit, do not travel further than 120 miles (200 km). In addition, reduce your speed and under no circumstances exceed 48 mph (80 km/h). The sticker, which you must affix in a prominent position on the dashboard, reminds you of this.
Depending on the country or local legislation, a tyre repaired with the inflation kit may need to be replaced.

Downloaded from www.Manualslib.com manuals search engine

WHEEL TRIMS (1/2)

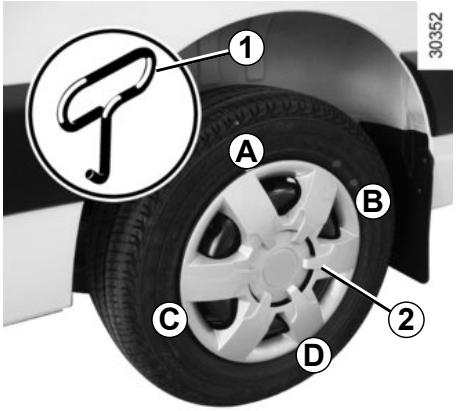

Wheel trim *2*
(concealed wheel bolts)

Remove it using hubcap tool ***1*** (found in the tool kit), by pushing the hook into the opening located near the valve (to reach the metal retaining wire located behind the wheel trim).

To refit it, align it with the valve. Push the retaining hooks, starting with side ***A*** on the valve side, then ***B*** and ***C*** and finish with the side opposite the valve ***D***.

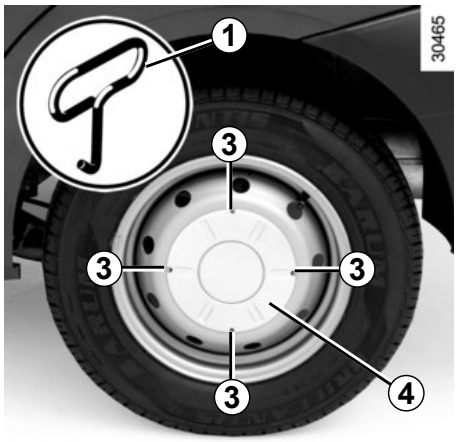

Central wheel trim *4*
(concealed wheel bolts)

Remove it using hubcap tool ***1***, inserting the tool into the recesses ***3*** provided.

To refit it, align it with the wheel bolts, clip it in and check it is securely locked.

Downloaded from www.Manualslib.com manuals search engine

WHEEL TRIMS (2/2)

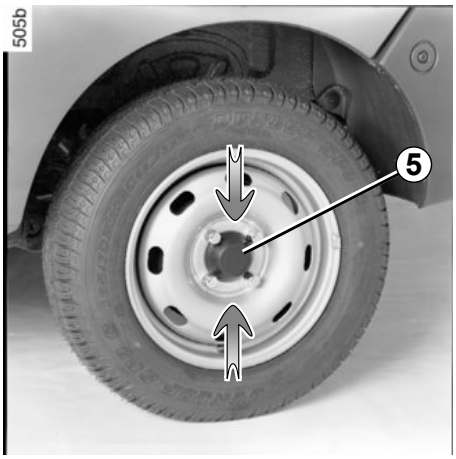

Wheel trim *5*
(exposed wheel bolts)

To remove it without removing the wheel, press it at the points indicated by the arrows.

Turn it so that the retaining brackets holding it in place behind the wheel bolts are released.

To refit the hubcap, proceed in reverse order.

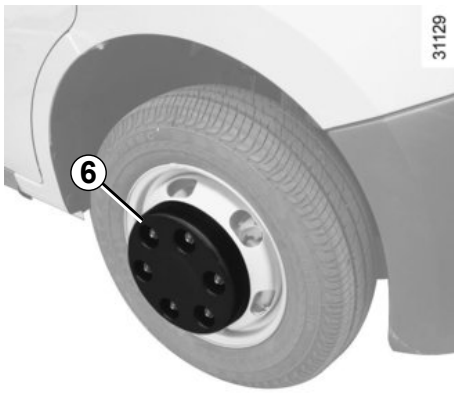

Wheel trim *6*
(front wheel only for vehicles equipped with dual wheels)

Remove the nut covers ***6*** by hand, then remove the wheel trim.

Downloaded from www.Manualslib.com manuals search engine

CHANGING A WHEEL: hydraulic jack (1/3)

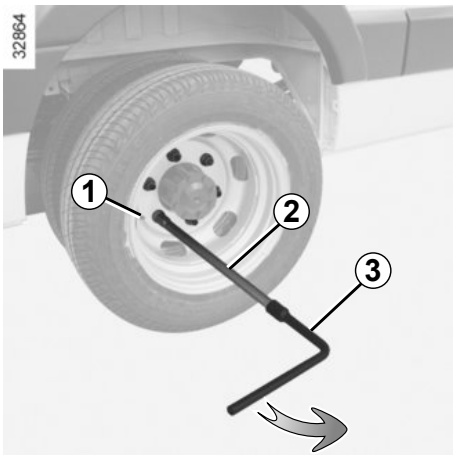

When removing dual wheels, unscrew inflating extension piece ***1***.

Do not forget to reattach it when refitting.

Undo the wheel bolts by fitting the wheel spanner ***3*** extended using the hexagonal extension piece ***2*** (supplied in the tool kit) and pressing down.

Anti-theft bolt

If you use anti-theft bolts, fit these nearest the valve (otherwise it may not be possible to fit the wheel trim).

If the vehicle is parked on the hard shoulder, you must warn other road users of your vehicle's presence with a warning triangle or with other devices as per the legislation applying to the country you are in.

Switch on the hazard warning lights.

Keep the vehicle away from traffic and on a level surface where it will not slip.

Apply the parking brake and engage a gear (first or reverse, or **N** for sequential gearboxes).
Ask all the passengers to leave the vehicle and keep them away from traffic.

Downloaded from www.Manualslib.com manuals search engine

CHANGING A WHEEL: hydraulic jack (2/3)

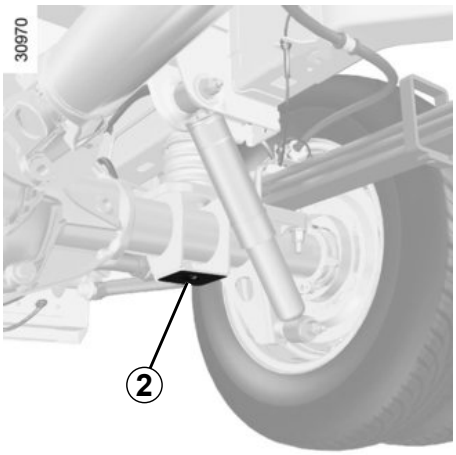

Take the jack ***3*** out of the tool kit. Familiarise yourself with the jack arrangement prior to using it.

Using the jack

Position the head of the jack on the contact points ***2*** close to the wheel concerned.

Place the jack ***3*** horizontally. The jack head must line up with the point ***2*** provided.

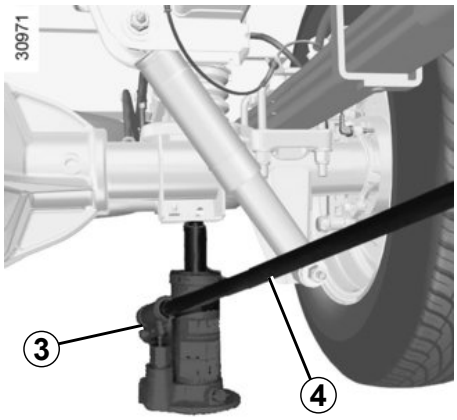

Begin to pump by moving the extension pieces ***4*** placed end-to-end (available in the tool box).

Free the wheel from the ground.

> To prevent any risk of injury or damage to the vehicle, raise the jack until the wheel you are replacing is a maximum of 3 centimetres off the ground.

Remove the screws, then remove the wheel (take off the central wheel trim if necessary).

Fit the emergency spare wheel on the central hub and, depending on the vehicle, turn it to align the mounting holes in the wheel and the hub.

If bolts are supplied with the emergency spare wheel, only use these bolts for the emergency spare wheel.

Downloaded from www.Manualslib.com manuals search engine

CHANGING A WHEEL: hydraulic jack (3/3)

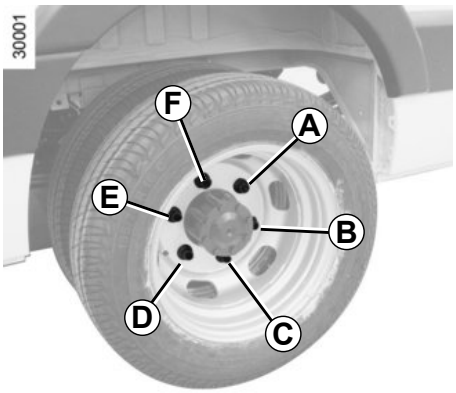

Tighten the nuts and lower the jack.

With the wheel on the ground, tighten the bolts completely, following the order of tightening below:

Wheel with 6 holes: start with screw ***A***, then ***D***, ***B***, ***E***, ***C*** and finish with ***F***.

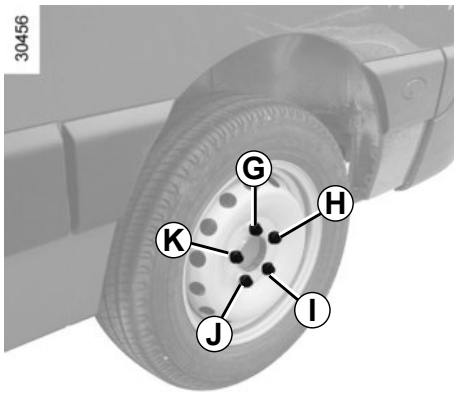

Wheel with 5 holes: start with screw ***G***, then ***J***, ***H***, ***K*** and finish with ***I***.

Have the tightening and the pressure of the spare wheel checked as soon as possible.

Downloaded from www.Manualslib.com manuals search engine

CHANGING A WHEEL: jack (1/2)

If the vehicle is parked on the hard shoulder, you must warn other road users of your vehicle's presence with a warning triangle or with other devices as per the legislation applying to the country you are in.

Switch on the hazard warning lights.

Keep the vehicle away from traffic and on a level surface where it will not slip.

Apply the parking brake and engage a gear (first or reverse, or **N** for sequential gearboxes).
Ask all the passengers to leave the vehicle and keep them away from traffic.

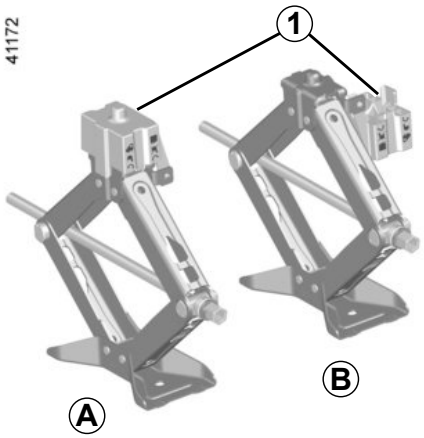

Vehicle equipped with a jack with a heightener

When changing a front wheel, use the heightener ***1*** (figure ***A***).

When changing a rear wheel, remove the heightener ***1*** (figure ***B***).

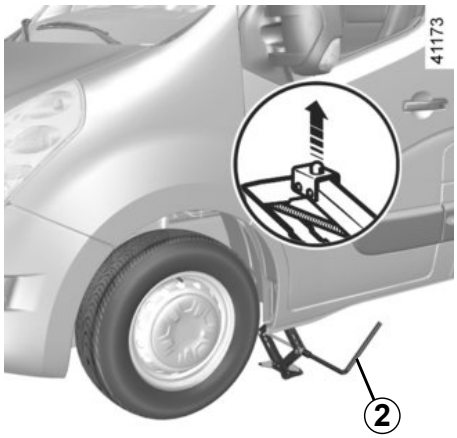

If necessary, remove the wheel trim.

Use the wheelbrace ***2*** to slacken off the wheel bolts. Position it so as to be able to push from above.

To prevent any risk of injury or damage to the vehicle, raise the jack until the wheel you are replacing is a maximum of 3 centimetres off the ground.

Downloaded from www.Manualslib.com manuals search engine

CHANGING A WHEEL: jack (2/2)

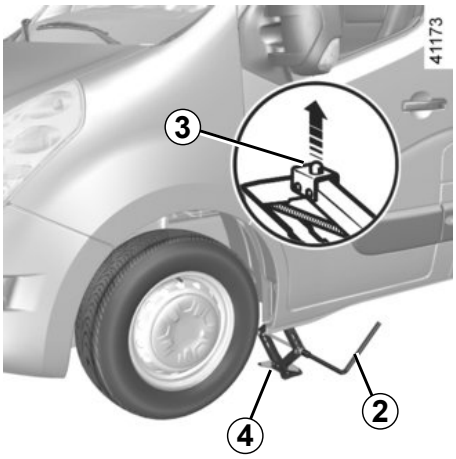

Position jack ***4*** horizontally. Jack head ***3*** **must** be positioned level with the reinforcement panel closest to the wheel in question or the contact points ***5***;
start cranking the jack up by hand to align the base plate (which should be pushed slightly under the vehicle).
Turn the wheelbrace a few times using the wheel spanner ***2*** until the wheel is lifted off the ground. Remove the bolts and take off the wheel;
fit the emergency spare wheel on the central hub and turn it to locate the mounting holes in the wheel and the hub.

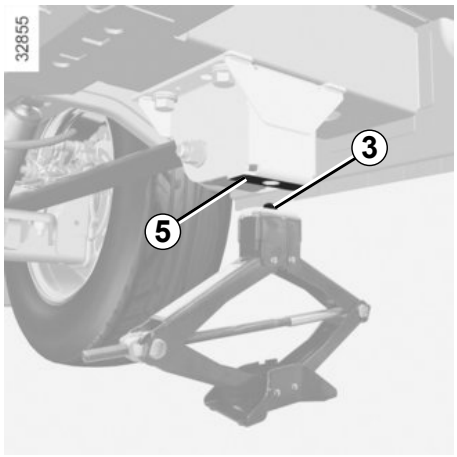

If bolts are supplied with the emergency spare wheel, only use these bolts for the emergency spare wheel. Tighten the bolts, checking that the wheel is correctly positioned on its hub and unscrew the jack.

Note: do not lubricate the wheel bolts.

Anti-theft bolt

If you use anti-theft bolts, fit these nearest the valve (otherwise it may not be possible to fit the wheel trim).

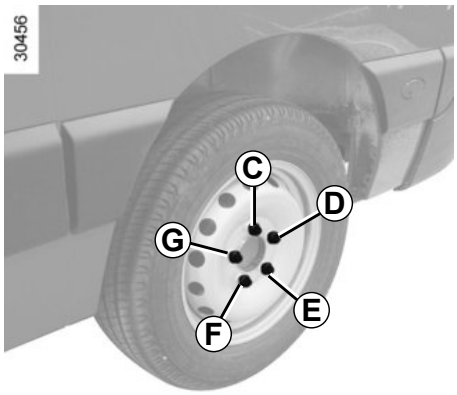

With the wheel on the ground, tighten the bolts firmly, starting on side ***C***, then ***E***, ***G***, ***D*** and ending with ***F***. Check the tightness and the tyre pressure on the emergency spare wheel as soon as possible.

If you have a puncture, replace the wheel as soon as possible.
A tyre which has been punctured should always be inspected (and repaired, where possible) by a specialist.

Downloaded from www.Manualslib.com manuals search engine

TYRES (1/3)

The tyres are the only contact between the vehicle and the road, so it is essential to keep them in good condition.

You must make sure that your tyres conform to local road traffic regulations.

For your safety, please respect the speed limit.

When they need to be replaced, only tyres of the same make, size, type and profile should be used on a single axle.

They must: either have a load capacity and speed rating at least equal to those of the original tyres, or conform to those recommended by an authorised dealer.

Failure to heed these instructions could endanger your safety and affect your vehicle's roadworthiness.

Risk of loss of control of the vehicle.

Maintaining the tyres

The tyres must be in good condition and the tread form must have sufficient depth; tyres approved by our Technical Department have tread wear indicators ***1*** which are **indicators moulded into the tread at several points**.

When the tyre tread has been worn to the level of the wear indicators, **they become visible *2*:** it is **then** necessary to replace your tyres because the tread rubber is **no more than 1.6 mm deep, resulting in poor roadholding on wet roads**.

An overloaded vehicle, long journeys by motorway, particularly in very hot weather, or continual driving on poorly surfaced minor roads will lead to more rapid tyre wear and affect safety.

Incidents which occur when driving, such as striking the kerb, may damage the tyres and wheel rims, and could also lead to misalignment of the front or rear axle geometry. In this case, have the condition of these checked by an approved dealer.

Downloaded from www.Manualslib.com manuals search engine

TYRES (2/3)

Tyre pressures

Adhere to the tyre pressures (including the emergency spare wheel). The tyre pressures should be checked at least once a month and additionally before any long journey (refer to the label affixed to the edge of the driver's door).

Incorrect tyre pressures lead to abnormal tyre wear and unusually hot running. These are factors which may seriously affect safety and lead to:

– poor road holding,

– risk of bursting or tread separation.

The pressure depends on the load and the speed of use. Adjust the pressure according to the conditions of use (refer to the label affixed to the edge of the driver's door).

Pressures should be checked when the tyres are cold; ignore higher pressures which may be reached in hot weather or following a fast journey.

If tyre pressures cannot be checked when the tyres are **cold,** the normal pressures must be increased by **0.2** to **0.3** bar (or **3 PSI**).

Never deflate a hot tyre.

Dual wheel versions

To inflate the outer wheel, it is recommended that the inflation tube is passed between the two wheels.

Please be aware that a poorly tightened or missing valve cap can make the tyres less airtight and lead to pressure loss.

Always use valve caps identical to those fitted originally and tighten them fully.

Vehicle fitted with a tyre pressure loss warning system

If underinflated (puncture, low pressure, etc.), the warning light on the instrument panel comes on, see "Tyre pressure loss warning system" in Section 2.

Fitting new tyres

For safety reasons, this operation must be carried out by a specialist.

Fitting different tyres may change your vehicle as follows:

– it may mean that your vehicle no longer conforms to current regulations;

– it may change the way it handles when cornering;

– it may cause the steering to be heavy;

– It may affect the use of snow chains.

Downloaded from www.Manualslib.com manuals search engine

TYRES (3/3)

Changing wheels around

This practice is not recommended.

Emergency spare wheel

Refer to the information on the “Emergency spare wheel” and “Changing a wheel” in Section 5.

Use in winter

Chains

Chains must not be fitted to tyres which are larger than those originally fitted to the vehicle.

Chains may only be fitted to tyres of the same size as those originally fitted to **your vehicle.**

Only certain chains can be fitted to tyres. Consult an approved Dealer.

Front wheel drive versions

For safety reasons, fitting snow chains to the rear axle is strictly forbidden.

Rear wheel drive versions

For safety reasons, only fit chains on the rear axle.

Note: for rear wheel drive, dual wheel versions, fit chains on the outer rear wheels.

Snow or winter tyres

We would recommend that these be fitted to **all four wheels** to ensure that your vehicle retains maximum grip.

Note: be aware that these tyres may sometimes have:

– a direction of travel;

– a maximum speed index which may be lower than the maximum speed of your vehicle.

Studded tyres

This type of equipment may only be used for a limited period and as laid down by local legislation.

It is necessary to observe the speed specified by current legislation.

These tyres must, as a minimum, be fitted to the two wheels on the front axle for front wheel drive versions and all the rear wheels for rear wheel drive versions.

In all cases, we would recommend that you contact an approved dealer who will be able to advise you on the choice of equipment which is most suitable for your vehicle.

Downloaded from www.Manualslib.com manuals search engine

HEADLIGHTS: changing bulbs (1/2)

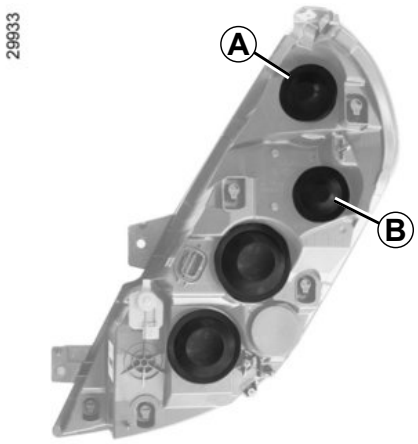

Front side lights

Remove cover ***B*** and pull bulb holder ***2***.

Bulb type: W5W.

Note: once the bulb has been replaced, ensure the cover is refitted correctly.

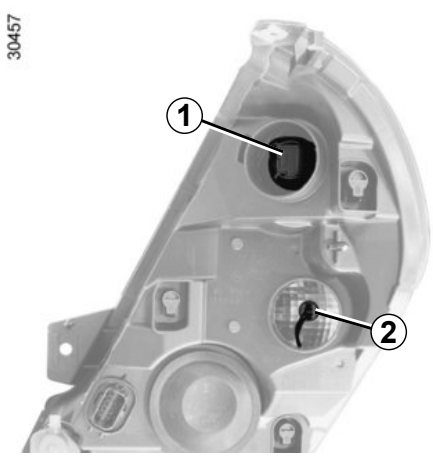

Direction indicators

Remove cover ***A*** and turn bulb holder ***1*** a quarter turn.

To refit the bulb holder, position it correctly, as determined by the foolproofing device.

Bulb type: **PY21W.**

Note: once the bulb has been replaced, ensure the cover is refitted correctly.

Deactivate the Stop and Start function for any operation performed in the engine compartment.

To comply with current legislation, or as a precaution, you can obtain an emergency kit from an approved dealer containing a set of spare bulbs and fuses.

The bulbs are under pressure and can break when replaced.

Risk of injury.

The engine may be hot when carrying out operations in close proximity. In addition, the engine cooling fan can come on at any moment.

Risk of injury.

Downloaded from www.Manualslib.com manuals search engine

HEADLIGHTS: changing bulbs (2/2)

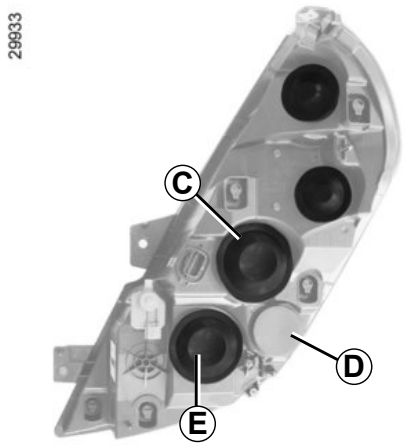

Dipped beam headlights

Remove cover ***E*** and turn bulb holder ***6*** a quarter turn.

Bulb type: H7LL.

Do not touch the bulb glass. Hold it by its base.

Note: once the bulb has been replaced, ensure the cover is refitted correctly.

Deactivate the Stop and Start function for any operation performed in the engine compartment.

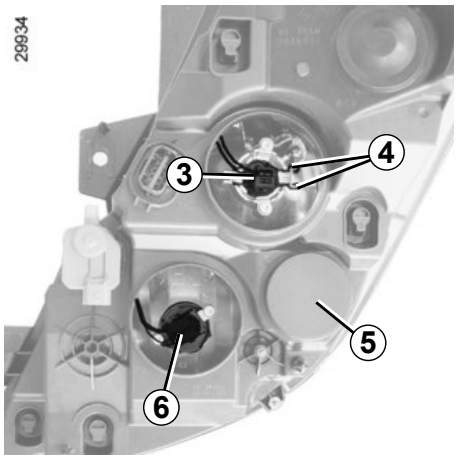

Cornering lights

(depending on the vehicle)

Remove cover ***D*** and turn bulb holder ***5*** a quarter turn.

Bulb type: H7.

Note: once the bulb has been replaced, ensure the cover is refitted correctly.

The bulbs are under pressure and can break when replaced.

Risk of injury.

Main beam headlights

Remove cover ***C***.

Unclip the springs ***4*** and remove the bulb holder ***3***.

Bulb type: H1.

Note: once the bulb has been replaced, ensure the cover is refitted correctly.

To comply with current legislation, or as a precaution, you can obtain an emergency kit from an approved dealer containing a set of spare bulbs and fuses.

The engine may be hot when carrying out operations in close proximity. In addition, the engine cooling fan can come on at any moment.

Risk of injury.

Downloaded from www.Manualslib.com manuals search engine

HEADLIGHTS: front fog lights

Fog lights *1*

Consult an approved dealer.

The bulbs are under pressure and can break when replaced.

Risk of injury.

Any operation on (or modification to) the electrical system must be performed by an approved dealer since an incorrect connection might damage the electrical equipment (harness, components and in particular the alternator). In addition, your Dealer has all the parts required for fitting these units.

Downloaded from www.Manualslib.com manuals search engine

SIDE LIGHTS: changing bulbs

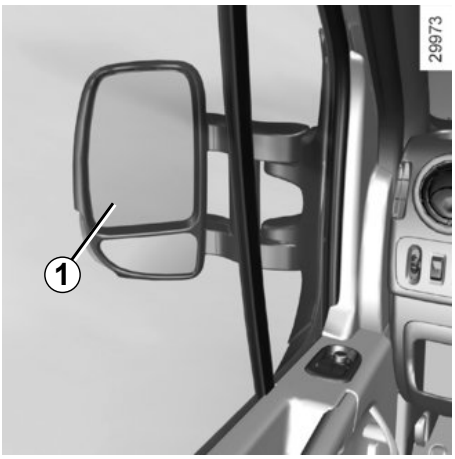

Side indicator lights

Move mirror ***1*** to access the bolt.

Undo the bolt using a Torx screwdriver.

Take out the indicator light and replace bulb ***2***.

Bulb type, depending on vehicle: WY5W or P21W.

To comply with current legislation, or as a precaution, you can obtain an emergency kit from an approved dealer containing a set of spare bulbs and fuses.

The bulbs are under pressure and can break when replaced.

Risk of injury.

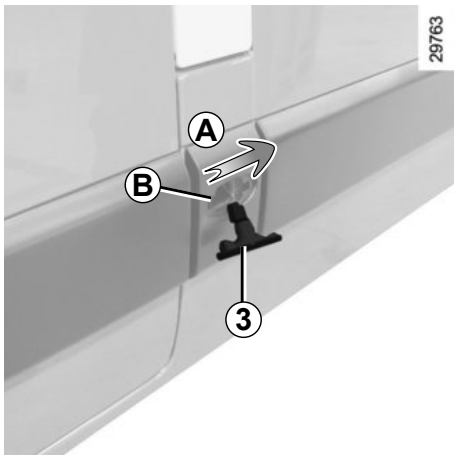

Clearance lights

Push light ***3*** (movement ***A***) and press at ***B*** to release the light.

Turn the bulb holder a quarter of a turn and replace the bulb.

Bulb type: W5W.

Downloaded from www.Manualslib.com manuals search engine

REAR LIGHTS: changing bulbs (1/2)

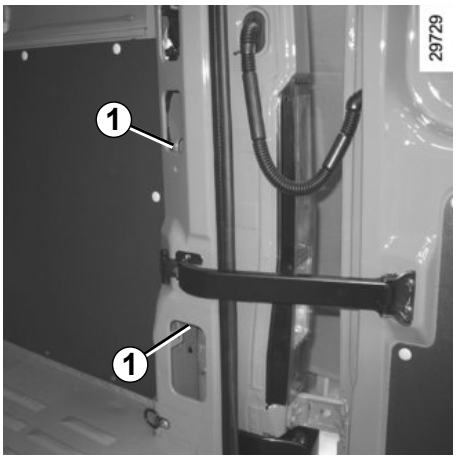

Rear lights

Depending on the vehicle, remove the protective grilles. Unscrew the two nuts ***1*** and pull rear light unit ***A***.

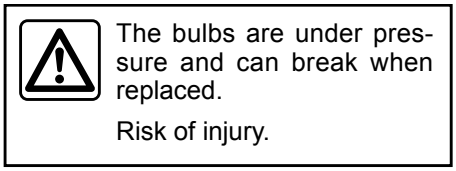

The bulbs are under pressure and can break when replaced.

Risk of injury.

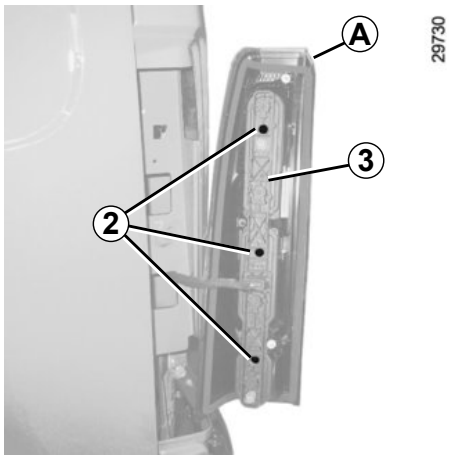

Unscrew the bolt ***2*** using a flat-blade screwdriver or similar to remove the bulb holder ***3***.

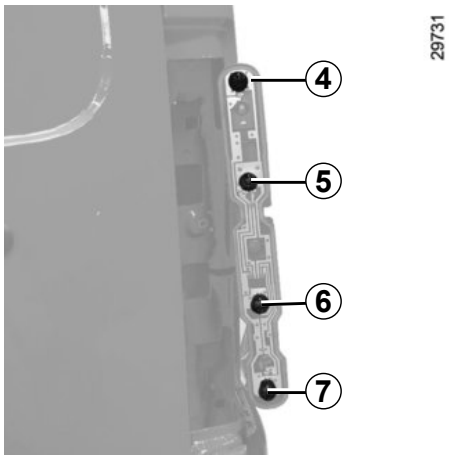

4 **Side lights and brake lights**

Pear-shaped, bayonet type **P21/5W** bulb with two filaments.

5 **Indicator**

Orange pear-shaped, bayonet type **PY21W** bulb.

6 **Reversing light**

Pear-shaped, bayonet type bulb **P21W**.

7 **Fog light**

Pear-shaped, bayonet type bulb **P21W**.

Downloaded from www.Manualslib.com manuals search engine

REAR LIGHTS: changing bulbs (2/2)

High-level brake light

Remove cover ***8***.

Unscrew the nut.

Remove the unit, from outside the vehicle, to gain access to bulb ***9***.

Bulb type: W16W.

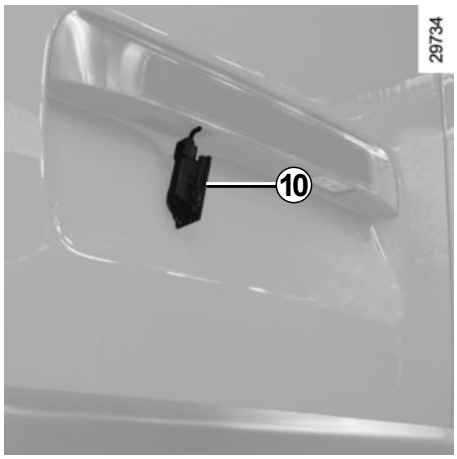

Number plate lights

Unclip light ***10*** (using a flat-blade screwdriver or similar).

Remove the light cover to gain access to the bulb.

Bulb type: W5W.

Downloaded from www.Manualslib.com manuals search engine

INTERIOR LIGHTING: changing bulbs

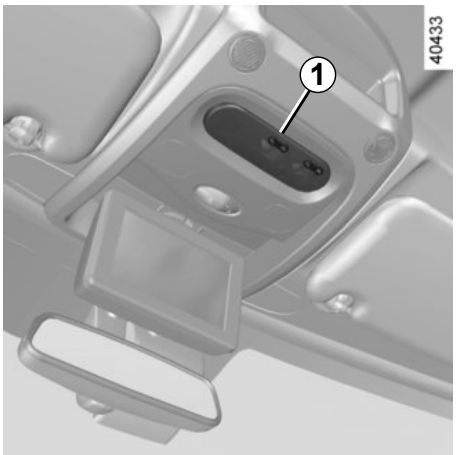

Courtesy light

Unclip the ceiling light diffuser ***1*** using a flat blade screwdriver or similar.

Pull the bulb to remove it from its housing.

Bulb type: W6W

Replace the bulb and refit the lens.

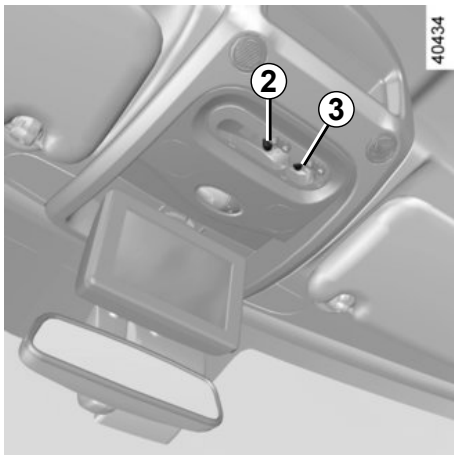

Special features for vehicles fitted with a reading lamp

Type of bulb *2*: festoon 10W
Type of reading lamp *3*: W5W

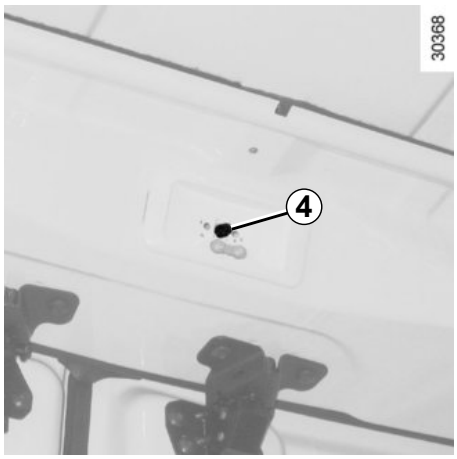

Rear lights

Unclip the ceiling light diffuser using a flat blade screwdriver or similar.

Pull the bulb to remove it from its housing.

Type of bulb *4* : W6W

Replace the bulb and refit the lens.

Downloaded from www.Manualslib.com manuals search engine

FUSES (1/5)

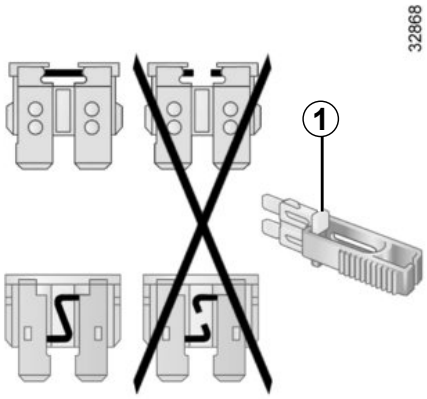

If any electrical component does not work, check the condition of the fuses.
Remove the fuse using tweezers ***1***, located at the back of flap ***A***.
To remove the fuse from the tweezers, slide the fuse to the side.
It is not advisable to use the free fuse locations.

To comply with legislation, or as a precaution, you can obtain an emergency kit containing a set of spare bulbs and fuses from an approved dealer.

Your vehicle is equipped with two fuse boxes: in the passenger compartment and in the engine compartment.

Check the fuse in question and **replace it,** if necessary, **by a fuse of the same rating**.
If a fuse is fitted where the rating is too high, it may cause the electrical circuit to overheat (risk of fire) in the event of an item of equipment using an excessive amount of current.

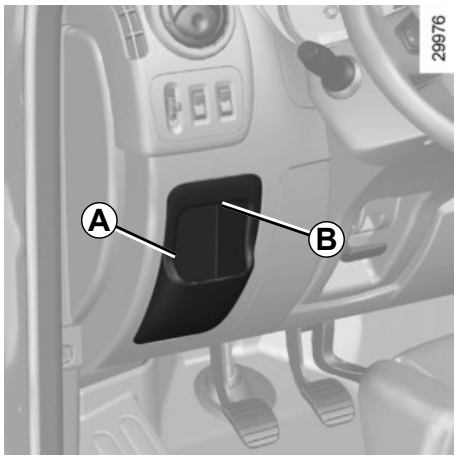

Fuses in the passenger compartment

Unclip flap ***A*** using notch ***B*** to help you.

To identify the fuses, refer to the fuse allocation label (see the next page for details), located on the rear of flap ***A***.

Downloaded from www.Manualslib.com manuals search engine

FUSES (2/5)

Allocation of fuses (DEPENDING ON THE EQUIPMENT LEVEL)

Numbers	Allocation
	Radio, heated seats, multi-function display, sockets for audio and alarm connections.
	Accessories sockets.
	Cigar lighter.
	Instrument panel.
	Central door control.
	Passenger compartment ECU, direction indicator lights and rear fog lights.
DIAG	Diagnostic socket.
ABS	ABS/ESP

Numbers	Allocation
	Brake lights, interior lighting.
	Passenger compartment ECU.
STOP	Brake lights.
ALIM UCH	Electric windows, heating and air conditioning system and passenger compartment ECU.
	Left-hand heated rear screen.
	Right-hand heated rear screen.
	Windscreen washer.
	Engine immobiliser.
	Heated seats.

Numbers	Allocation
FBL	Cornering lights.
	Hands-free access.
T	Tachograph.
	Heating and air conditioning system fan.
ADP	Additional adaptations.
	Electric windows and passenger compartment ECU.

Downloaded from www.Manualslib.com manuals search engine

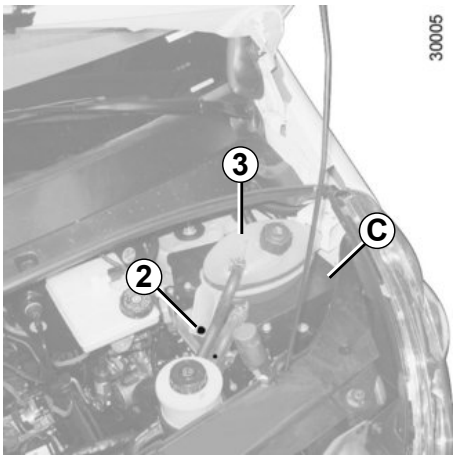

Fuses in the engine compartment

Removing fuse box *C*

Remove screw ***2*** and remove coolant reservoir ***3***.

No operations should be carried out on the cooling circuit when the engine is hot.

Risk of burns.

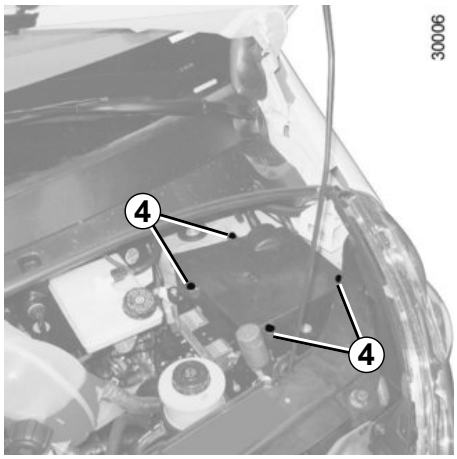

Unscrew the four screws ***4***.

The engine may be hot when carrying out operations in close proximity. In addition, the engine cooling fan can come on at any moment.

Risk of injury.

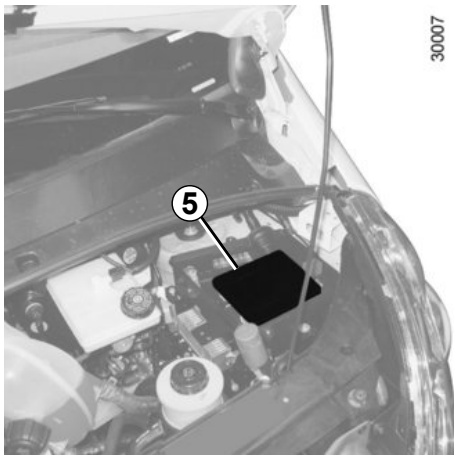

Turn unit ***5*** over to access the fuses in the engine compartment.

To identify the fuses, refer to the fuse allocation label (see the next page for details), located on unit ***5***.

Check that no water or dust enters unit ***5*** when it is being removed/refitted.

Deactivate the Stop and Start function for any operation performed in the engine compartment.

Downloaded from www.Manualslib.com manuals search engine

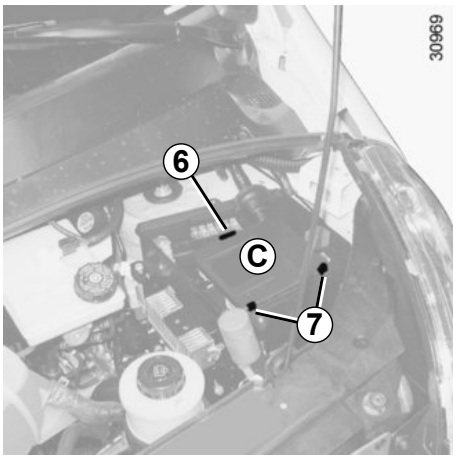

Refitting fuse box *C*

Clip the mountings ***7***, then clip mounting ***6***.

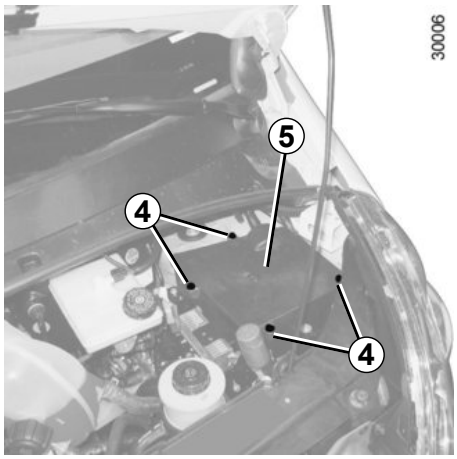

Screw the four screws ***4*** to ensure that unit ***5*** is completely sealed.

Check that no water or dust enters unit ***5*** when it is being removed/refitted.

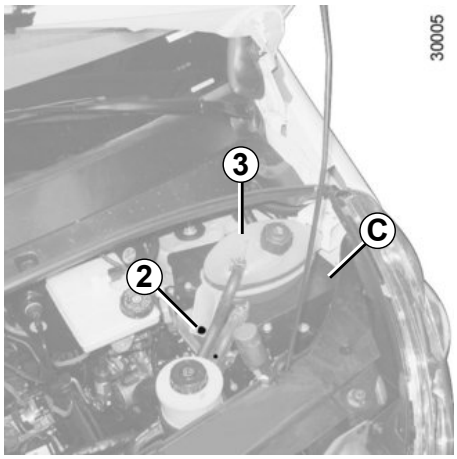

Position coolant reservoir ***3***, then screw bolt ***2***.

Downloaded from www.Manualslib.com manuals search engine

FUSES (5/5)

Allocation of fuses (DEPENDING ON THE EQUIPMENT LEVEL)

Symbol	Allocation
	Right-hand side light.
	Left-hand side light.
	Right-hand dipped beam headlight.
	Left-hand dipped beam headlight.
	Fog light
	Left-hand main beam headlight.

Symbol	Allocation
	Right-hand main beam headlight.
	ABS
	Windscreen wiper.
	Heating and air conditioning system.
	De-icing.

Downloaded from www.Manualslib.com manuals search engine

BATTERY: troubleshooting (1/2)

To avoid all risk of sparks:

– Ensure that any consumers (courtesy lights, etc.) are switched off before disconnecting or reconnecting the battery;
– when charging, stop the charger before connecting or disconnecting the battery;
– to avoid creating a short circuit between the terminals, do not place metal objects on the battery;
– always wait at least one minute after the engine has been switched off before disconnecting a battery;
– make sure that you reconnect the battery terminals after refitting.

Special procedures may be required to charge some batteries. Contact your approved dealer.

Avoid all risk of sparks which may cause an immediate explosion, and charge the battery in a well-ventilated area. Risk of serious injury.

Connecting a battery charger

The battery charger must be compatible with a battery with nominal voltage of 12 volts.

Do not disconnect the battery when the engine is running. **Follow the instructions given by the manufacturer of the battery charger you are using.**

When many accessories are fitted to the vehicle, have them connected to the **+ after ignition feed**.

Handle the battery with care as it contains sulphuric acid, which must not come into contact with eyes or skin. If it does, wash the affected area with plenty of cold water. If necessary, consult a doctor.

Ensure that naked flames, red hot objects and sparks do not come into contact with the battery as there is a risk of explosion.

The engine may be hot when carrying out operations in close proximity. In addition, the engine cooling fan can come on at any moment.

Risk of injury.

Downloaded from www.Manualslib.com manuals search engine

BATTERY: troubleshooting (2/2)

Starting the vehicle using the battery from another vehicle

If you have to use the battery from another vehicle to start, obtain suitable jump leads (with a large cross section) from an approved dealer or, if you already have jump leads, ensure that they are in perfect condition.

The two batteries must have an identical nominal voltage of 12 volts. The battery supplying the current should have a capacity (amp-hours, Ah) which is at least the same as that of the discharged battery.

Ensure that there is no risk of contact between the two vehicles (risk of short circuiting when the positive terminals are connected). Switch off your vehicle ignition.

Start the engine of the vehicle supplying the current and run it at a moderate speed.

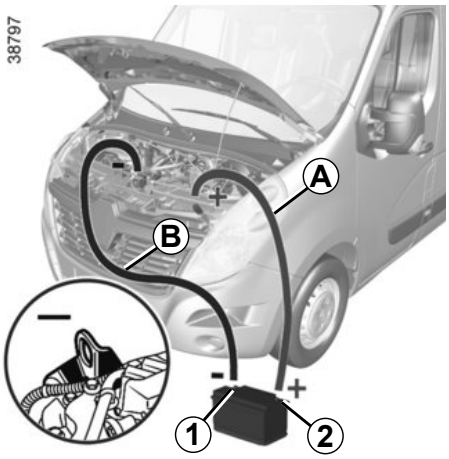

Attach the positive lead (+) ***A*** to terminal ***3***, then to terminal ***2*** (+) of the battery supplying the current.

Attach negative lead (–) ***B*** to terminal ***1*** (–) of the battery supplying the current, then to earth ***4*** (–).

Start the engine as normal. As soon as it is running, disconnect leads ***A*** and ***B*** in the reverse order (***4***-***3***-***2***-***1***).

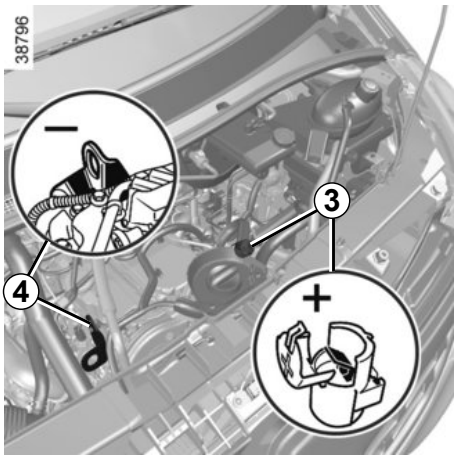

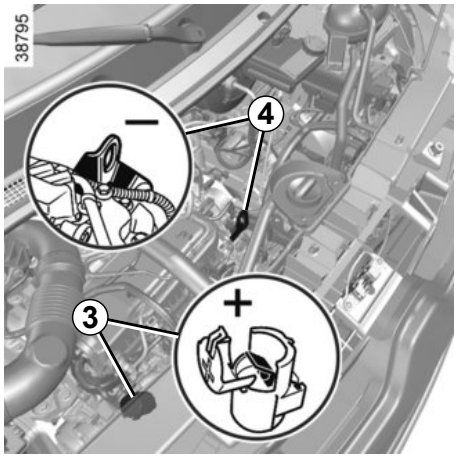

Check that there is no contact between leads ***A*** and ***B*** and that the positive lead ***A*** is not touching any metal parts on the vehicle supplying the current.

Risk of injury and/or damage to the vehicle.

Downloaded from www.Manualslib.com manuals search engine

RADIO FREQUENCY REMOTE CONTROL: battery

29999

Replacing the remote control battery

Undo screw ***1*** to remove the remote control cover.

The batteries are available from approved Dealers, and their service life approximately two years.

Check that there is no dye on the battery: risk of an incorrect electrical contact.

31574

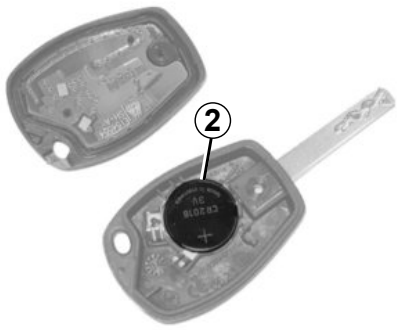

Replace battery ***2*** according to the direction marked on the cover.

Note: It is not advisable to touch the electronic circuit in the key cover when replacing the battery.

When refitting, ensure that the cover is correctly clipped on and the screw tightened.

26913

Do not dispose of your used batteries in the countryside. Give them to an organisation that collects and recycles used batteries.

Downloaded from www.Manualslib.com manuals search engine

HANDS-FREE ACCESS TRANSMITTER/RECEIVER: battery

31565

Replacing the battery

Use a coin to open the unit via slot ***1***.

The batteries are available from approved Dealers, and their service life approximately two years.

Check that there is no dye on the battery: risk of an incorrect electrical contact.

30419

Replace battery ***2*** according to the direction marked on the cover.

Note: it is not advisable to touch the electronic circuit in the cover when replacing the battery.

When refitting, ensure that the cover is correctly clipped into place.

26913

Do not dispose of your used batteries in the countryside. Give them to an organisation that collects and recycles used batteries.

Downloaded from www.Manualslib.com manuals search engine

WIPER BLADES

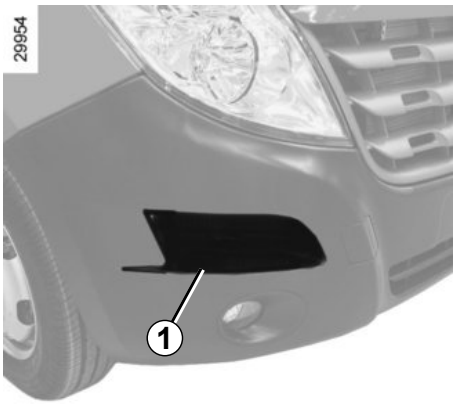

To access the wiper blades, stand on step ***1***.

Note: the step may be slippery.

Replacing windscreen wiper blades *2*

– Lift wiper arm ***4***;

– move the blade into a horizontal position;

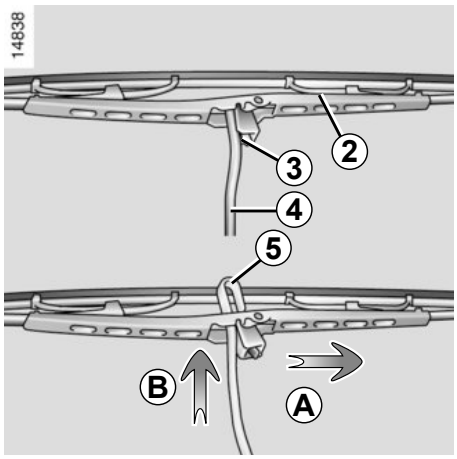

– press tab ***3*** and slide the wiper blade downwards to release hook ***5*** from the wiper arm;

– slide the blade (***A***) then lift it (***B***) to release it.

Refitting

To refit the wiper blade, proceed in the reverse order to removal. Make sure that the blade is correctly locked in position.

Check the condition of the wiper blades. You are responsible for their service life:

– clean the blades and the windscreen regularly with soapy water;

– do not use them when the windscreen is dry;

– free them from the windscreen when they have not been used for a long time.

– In frosty weather, make sure that the wiper blades are not stuck by ice (to avoid the risk of the motor overheating).

– Check the condition of the wiper blades.
Replace the wiper blades as soon as they begin to lose efficiency (approximately once a year).

Whilst changing the blade, take care not to drop the arm onto the window after it has been removed as this may break the window.

Downloaded from www.Manualslib.com manuals search engine

TOWING: breakdown (1/2)

The steering wheel must be unlocked and the ignition key must be in position M (ignition on) to provide brake lights and hazard warning lights on the towed vehicle. At night the vehicle must have its lights on.

Unhitch the trailer, etc., if one is being towed.

You must observe the towing regulations which apply in the country in which you are driving: do not exceed the towing weight for your vehicle.

Contact an approved dealer.

Only use:

- **At the rear left, towing point *1*.**
- **At the front, towing hitch *4*** (from the tool kit) **and towing point *2*.**

These towing points may only be used for pulling the vehicle, never for lifting it either directly or indirectly.

Rear towing point *1*

Do not remove the key from the ignition when the vehicle is being towed.

When the engine is stopped, steering and braking assistance are not operational.

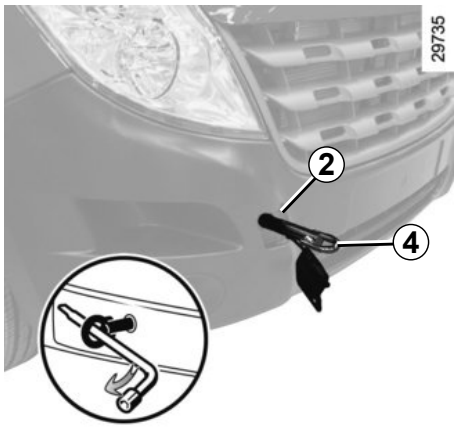

– Use a rigid towing bar. If a rope or cable is used (where the law allows this), the vehicle being towed must be able to brake.

- A vehicle must not be towed if it is not fit to be driven.
- Avoid accelerating or braking suddenly when towing, as this may result in damage being caused to the vehicle.
- When towing a vehicle, it is advisable not to exceed **15 mph (25 km/h)**.

Downloaded from www.Manualslib.com manuals search engine

TOWING: breakdown (2/2)

Front towing point *2*

Accessing towing hitch *4*

Move the driver's seat forward and recline the seatback so that tool kit ***3*** can be removed.

Access to front towing point *2*

Unclip cover ***5*** by inserting a flat-blade screwdriver or similar under the cover.

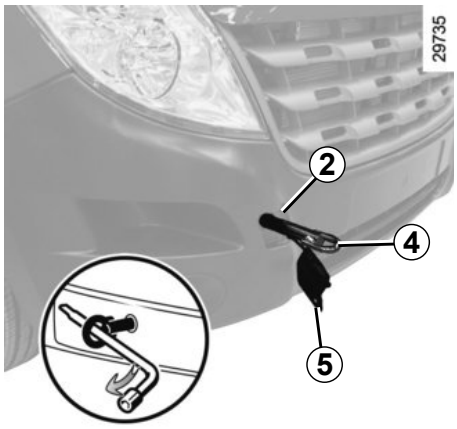

First screw in towing hitch *4* as far as it will go by hand, then finish tightening it fully using the wheelbrace stored in tool kit ***3***.

When storing the tools, ensure that they are correctly replaced in unit ***3***, in their original positions and store the unit under the driver's seat. Do not leave the tools unsecured inside the vehicle as they may come loose under braking.

Downloaded from www.Manualslib.com manuals search engine

FITTING THE RADIO

If your vehicle is not fitted with an audio system, one can be fitted and locations have been provided for:

– radio ***1***;
– front speakers ***2*** (depending on the vehicle).

To install any equipment, please consult an approved dealer.

Radio location *1*

Unclip the blanking cover. The aerial, + and – supply and speaker wire connections are located behind it.

– In all cases, it is very important to follow the manufacturer's instructions carefully.
– The specifications of the brackets and wires (available from our network) vary depending on the equipment level of your vehicle and the type of radio.

  Consult an approved Dealer to find out the correct part number.
– No work may be carried out on the vehicle's electrical or radio circuits, except by approved dealers: an incorrectly connected system may result in damage being caused to the electrical equipment and/or the components connected to it.

Downloaded from www.Manualslib.com manuals search engine

ACCESSORIES

Electrical and electronic accessories
Before installing this type of accessory (particularly for transmitters/receivers: frequency bandwidth, power level, position of the aerial, etc.), make sure it is compatible with your vehicle. You can get advice from an authorised dealer.
Connect accessories with a maximum power of 120 Watts only. **Fire hazard.** When several accessory sockets are used at the same time, the total power of the connected accessories must not exceed 180 watts.
No work may be carried out on the vehicle's electrical or radio circuits, except by authorised dealers: an incorrectly connected system may result in damage being caused to the electrical equipment and/or the components connected to it.
If the vehicle is fitted with any aftermarket electrical equipment, make sure that the installation is correctly protected by a fuse. Establish the rating and position of this fuse.

Using the diagnostic socket
The use of electronic accessories on the diagnostic socket may cause serious disturbance to the vehicle's electronic systems. For your safety we recommend that you use only electronic accessories approved by the manufacturer, consult an Approved Dealer. **Serious accident risk**.

Use of transmitting/receiving devices (telephones, CB equipment etc.).
Telephones and CB equipment with integrated aerials may cause interference to the electronic systems originally fitted to the vehicle: it is advisable only to use equipment with an external aerial. **Furthermore, we remind you of the need to conform to the legislation in force concerning the use of such equipment.**

Fitting aftermarket accessories
If you wish to install accessories on the vehicle: please contact an authorised dealer. Also, to ensure the correct operation of your vehicle, and to avoid any risk to your safety, we recommend that you use only accessories specifically designed for your vehicle, which are the only accessories for which the manufacturer will provide a warranty.
If you are using an anti-theft device, only attach it to the brake pedal.
Obstructions to the driver
On the driver's side, only use mats suitable for the vehicle, attached with the pre-fitted components, and check the fitting regularly. Do not lay one mat on top of another. **There is a risk of wedging the pedals.**

Downloaded from www.Manualslib.com manuals search engine

OPERATING FAULTS (1/4)

The following advice will enable you to carry out quick, temporary repairs. For safety reasons you should always contact an approved dealer as soon as possible.

The starter is activated	POSSIBLE CAUSES	WHAT TO DO
Warning lights dim or fail to come on; the starter does not run.	Battery terminals disconnected, oxidised or incorrectly secured.	Contact an approved Dealer.
	Battery discharged or worn.	Connect another battery to the faulty battery. Refer to the paragraph “Battery: troubleshooting” in Section 5 or replace the battery if necessary. Do not push the vehicle if the steering column is locked.
The engine will not start.	Starting conditions are not fulfilled.	Refer to the information on “Starting/stopping the engine” in Section 2.
The steering column remains locked.	Steering wheel locked.	To unlock, move the key and the steering wheel (refer to the information on the “Ignition switch” in Section 2).

Downloaded from www.Manualslib.com manuals search engine

OPERATING FAULTS (2/4)

On the road	POSSIBLE CAUSES	WHAT TO DO
Vibrations.	Tyres not inflated to the correct pressure, incorrectly balanced or damaged.	Check the tyre pressures: if this is not the problem, have them checked by an approved dealer.
Coolant boiling in the coolant reservoir.	Mechanical fault: damaged cylinder head gasket.	Stop the engine. Contact an approved Dealer.
Smoke under the bonnet.	Short circuit or cooling system leak.	Stop, switch off the ignition, stand away from the vehicle and contact an approved dealer.
The oil pressure warning light comes on:		
while cornering or braking	The level is too low.	Top up the engine oil (refer to the information on “Engine oil level – Topping up/refilling” in Section 4).
is slow to go out or remains lit under acceleration	Loss of oil pressure.	Stop the vehicle and contact an approved Dealer.
White smoke from the exhaust.	This is not necessarily a fault. Smoke may be caused by regeneration of the particle filter.	Refer to the information on “Special features of diesel versions” in Section 2.

Downloaded from www.Manualslib.com manuals search engine

OPERATING FAULTS (3/4)

On the road	POSSIBLE CAUSES	WHAT TO DO
Steering becomes heavy.	Assistance overheating.	Consult an approved Dealer.
The engine is overheating. The coolant temperature warning light and the STOP warning light come on.	Engine cooling fan not working.	Stop the vehicle, switch off the engine and contact an approved Dealer.
	Coolant leaks.	Check the coolant reservoir: it should contain fluid. If there is no coolant, consult an approved Dealer as soon as possible.

Radiator: If there is a significant lack of coolant, remember that it must never be topped up using cold coolant while the engine is very warm. After any procedure on the vehicle which has involved even partial draining of the cooling system, it must be refilled with a new mixture prepared in the correct proportions. Reminder: only products approved by our Technical Department may be used for this purpose.

Downloaded from www.Manualslib.com manuals search engine

OPERATING FAULTS (4/4)

Electrical equipment	POSSIBLE CAUSES	WHAT TO DO
The wipers do not work.	Wiper blades stuck.	Free the blades before using the wipers.
	Faulty electrical circuit.	Consult an approved dealer.
The wiper does not stop.	Faulty electrical controls.	Consult an approved dealer.
Direction indicators flashing more quickly.	Blown bulb.	See the information on “Headlights: changing bulbs” or “Rear lights: changing bulbs” in Section 5.
The direction indicators do not work.	Faulty electrical circuit.	Consult an approved dealer.
The lights do not come on or go off.	Faulty electrical circuit or control.	Consult an approved dealer.
Traces of condensation in the lights.	Traces of condensation may be a natural phenomenon caused by variations in temperature. In this situation, these traces soon disappear when the lights are switched on.	

Downloaded from www.Manualslib.com manuals search engine

Downloaded from www.Manualslib.com manuals search engine

Section 6: Technical specifications

Vehicle identification plates 6.2
Engine specifications. 6.5
Dimensions 6.6
Weights 6.8
Replacement parts and repairs 6.9
Service sheets. 6.10
Anticorrosion check 6.16

Downloaded from www.Manualslib.com manuals search engine

VEHICLE IDENTIFICATION PLATES (1/2)

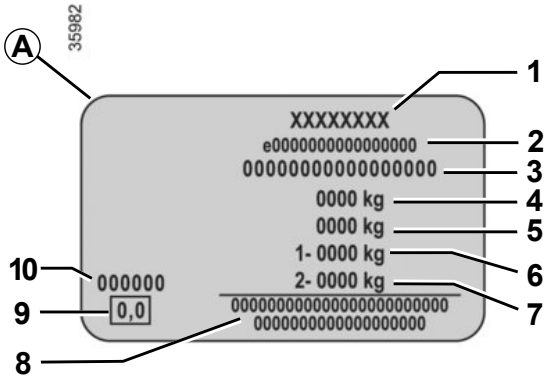

The information shown on the vehicle identification plate should be quoted on all correspondence or orders.

Vehicle identification plate *A*

1 Manufacturer name.

2 EC design number or approval number.

3 Identification number.
Depending on the vehicle, this information is also given on marking *B*.

4 MAM (Maximum Authorised Mass).

5 GTW (Gross train weight: vehicle fully loaded, with trailer).

6 MPAW (Maximim Permissible Weight) for front axle.

7 MPAW on rear axle.

8 Reserved for related or additional entries.

9 Diesel exhaust emissions.

10 Paint reference (colour code).

Downloaded from www.Manualslib.com manuals search engine

VEHICLE IDENTIFICATION PLATES (2/2)

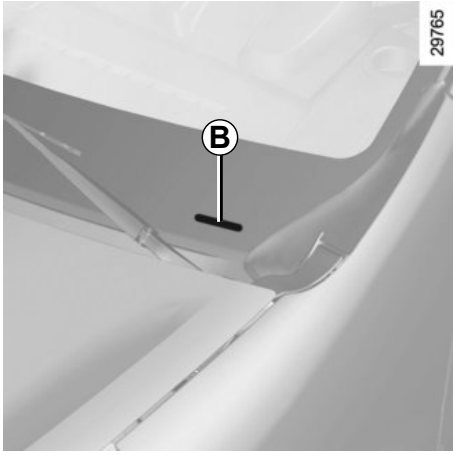

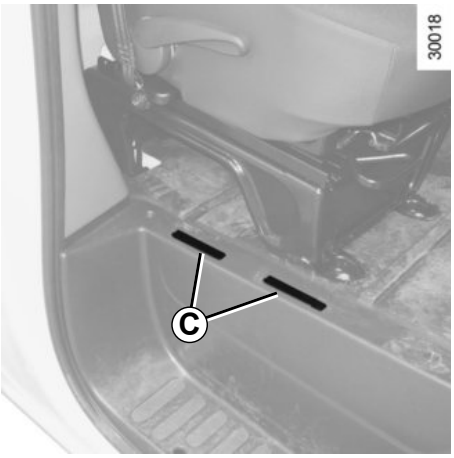

To access the vehicle type and chassis number, unclip the covers ***C*** using a flat-blade screwdriver or similar.

Downloaded from www.Manualslib.com manuals search engine

ENGINE IDENTIFICATION PLATES

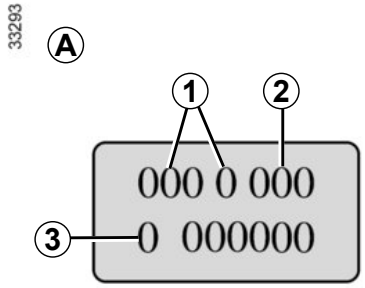

The information on the engine plate or label *A* should be quoted on all your correspondence or orders.
(Location varies depending on engine)

1 Engine type.
2 Engine suffix.
3 Engine number.

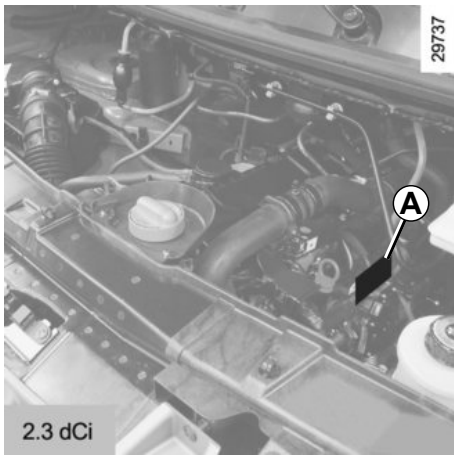

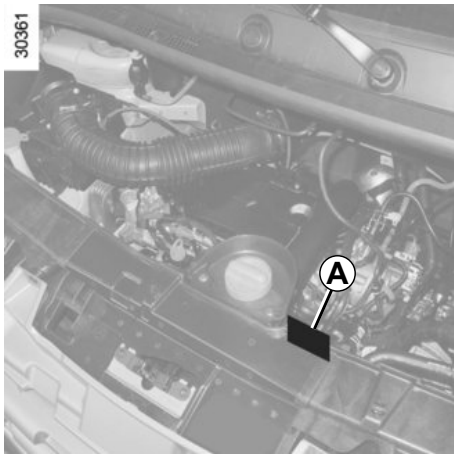

Downloaded from www.Manualslib.com manuals search engine

ENGINE SPECIFICATIONS

Engine type (indicated on the engine plate)	M9T
Cubic capacity (cc)	2 299
Injection	Diesel
Type of fuel	Diesel

Downloaded from www.Manualslib.com manuals search engine

DIMENSIONS (in metres) (1/2)

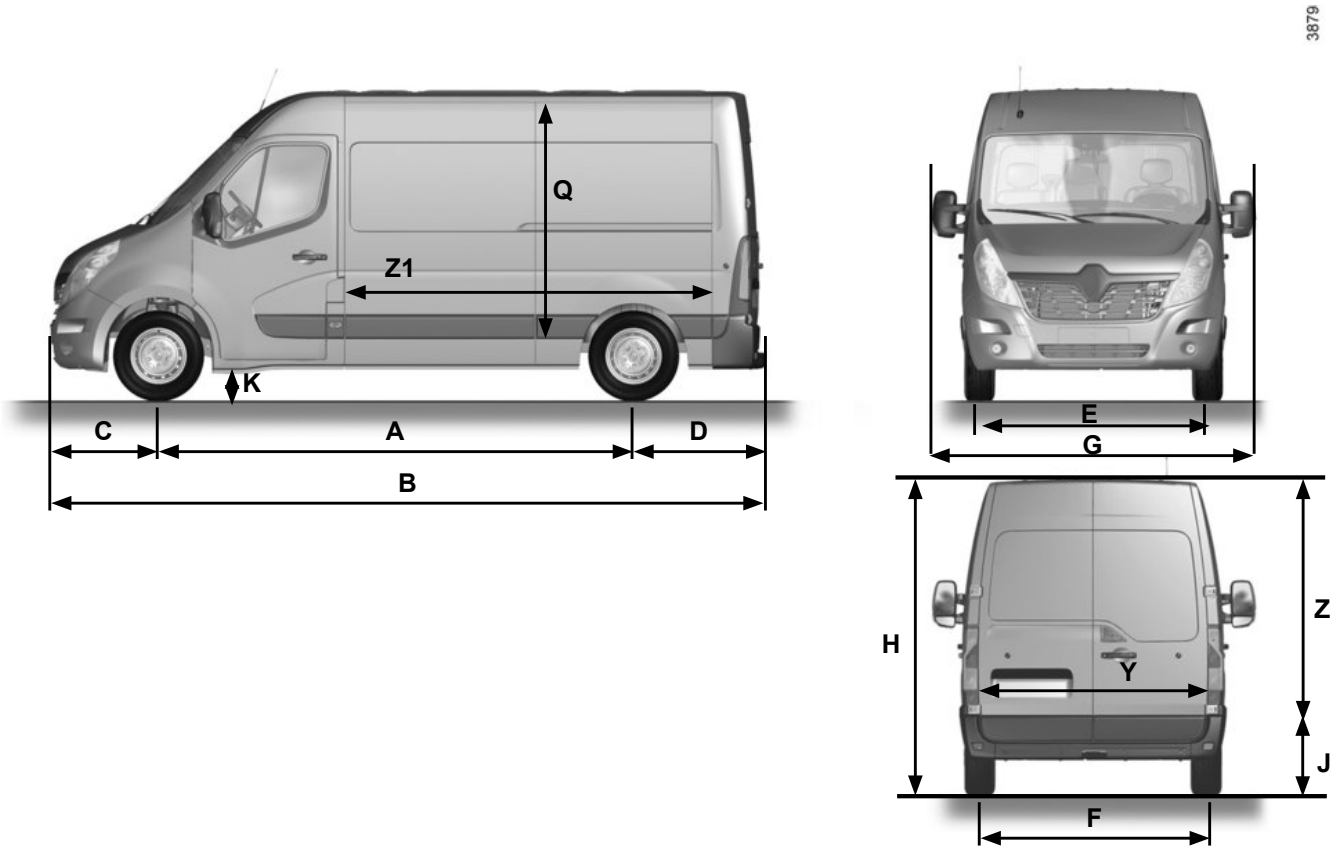

Downloaded from www.Manualslib.com manuals search engine

DIMENSIONS (in metres) (2/2)

Complete vehicles without recent alterations

	Short (L1)	Average (L2)	Medium (L2.5)	Long (L3)	Long (L4)
A	3,182	3,682	4,006	3,682 → 4,332	4,332
B	5,048	5,548	5,967	6,198	6,848
C	0,842				
D	1,024			1,024 → 1,674	1,575 → 1,674
E	1,750				
F	1,730	1,730 → 1,860		1,612 → 1,730	1,612
G	2,470				
H	2,222 → 2,500	2,256 → 2,745	2,256 → 2,261	2,270 → 2,815	2,267 → 2,808
J	0,546 → 0,560	0,543 → 0,787	0,735 → 0,740	0,542 → 0,775	0,700 → 0,789
K	0,189 → 0,196	0,166 → 0,185	0,166	0,166 → 0,208	0,166 → 0,178
Q	1,700 → 1,894	1,894 → 2,144	-	1,798 → 2,048	
Y	1,580		-	1,580	
Z	1,627	1,820	-	1,724 → 1,820	1,724
Z1	2,583	3,083	-	3,733	4,383

Downloaded from www.Manualslib.com manuals search engine

WEIGHTS (in kg)

The weights indicated are for a basic vehicle without options: they vary depending on the your vehicle's equipment. Contact an approved dealer.

Versions	Up to 3.5 tonnes			from 3.5 to 4.5 tonnes
Maximum permissible all-up weight (MMAC) **Total train weight**	Weights indicated on the identification plate (refer to the information on "Vehicle identification plates" in Section 6)			
Braked Trailer Weight* (Masse Remorque Freinée/MRF)	obtained by calculating: **MTR - MMAC**			
Unbraked Trailer Weight*	750			
Permissible nose weight*	Front wheel drive versions	Rear wheel drive versions with MRF of up to 3 tonnes	Rear wheel drive versions with MRF of between 3 and 3.5 tonnes	-
	100	120	140	120
Maximum permissible load on roof	Standard version: 200 Raised version: prohibited			

*** Towing weight (Towing a caravan, boat, etc.)**
Towing is prohibited when the GTW - MAM calculation is equal to zero, or when the GTW is equal to zero (or is not listed) on the identification plate.

- It is important to comply with the towing weights, governed by local legislation in each country and, in particular, laid down in the Road Traffic Regulations. Contact an approved Dealer about any towing equipment.
- When towing, under no circumstances may **the total train weight (vehicle + trailer) be exceeded**. However the following is permitted:
  - the Maximum permissible weight at the rear may be exceeded by no more than 15%,
  - the maximum permissible all-up weight may be exceeded by no more than 10% or 100 kg (whichever occurs first).

  In either case, the maximum speed of the vehicle and trailer must not exceed 48 mph (80 kph), depending on local legislation, and the tyre pressure must be increased by 0.2 bar (3 PSI).
- The engine output and climbing capability are reduced with altitude. We recommend that the maximum load be reduced by 10% at an altitude of 1,000 metres and by an additional 10% for each 1,000 metres thereafter.

Downloaded from www.Manualslib.com manuals search engine

REPLACEMENT PARTS AND REPAIRS

Original parts are based on strict specifications and are subject to highly-specialised tests. Therefore, they are of at least the same level of quality as the parts fitted originally.

If you always fit genuine replacement parts to your vehicle, you will ensure that it performs well. Furthermore, repairs carried out within the manufacturer's Network using original parts are guaranteed according to the conditions set out on the reverse of the repair order.

Downloaded from www.Manualslib.com manuals search engine

SERVICE SHEETS (1/6)

VIN: .....

Date: Miles (km):	Invoice number:	Comments/miscellaneous
Type of operation: Service □ ..... □ **Anticorrosion check:** OK □ Not OK* □ *See specific page	**Stamp**	

Date: Miles (km):	Invoice number:	Comments/miscellaneous
Type of operation: Service □ ..... □ **Anticorrosion check:** OK □ Not OK* □ *See specific page	**Stamp**	

Date: Miles (km):	Invoice number:	Comments/miscellaneous
Type of operation: Service □ ..... □ **Anticorrosion check:** OK □ Not OK* □ *See specific page	**Stamp**	

Downloaded from www.Manualslib.com manuals search engine

SERVICE SHEETS (2/6)

VIN: .....

Date: Miles (km): Invoice number:		Comments/miscellaneous
Type of operation: Service ◻ ..... ◻ **Anticorrosion check:** OK ◻ Not OK* ◻ *See specific page	**Stamp**	

Date: Miles (km): Invoice number:		Comments/miscellaneous
Type of operation: Service ◻ ..... ◻ **Anticorrosion check:** OK ◻ Not OK* ◻ *See specific page	**Stamp**	

Date: Miles (km): Invoice number:		Comments/miscellaneous
Type of operation: Service ◻ ..... ◻ **Anticorrosion check:** OK ◻ Not OK* ◻ *See specific page	**Stamp**	

Downloaded from www.Manualslib.com manuals search engine

SERVICE SHEETS (3/6)

VIN: .....

Date: Miles (km):	Invoice number:	Comments/miscellaneous
Type of operation: Service ◻ ..... ◻ **Anticorrosion check:** OK ◻ Not OK* ◻ *See specific page	**Stamp**	

Date: Miles (km):	Invoice number:	Comments/miscellaneous
Type of operation: Service ◻ ..... ◻ **Anticorrosion check:** OK ◻ Not OK* ◻ *See specific page	**Stamp**	

Date: Miles (km):	Invoice number:	Comments/miscellaneous
Type of operation: Service ◻ ..... ◻ **Anticorrosion check:** OK ◻ Not OK* ◻ *See specific page	**Stamp**	

Downloaded from www.Manualslib.com manuals search engine

SERVICE SHEETS (4/6)

VIN: .....

Date: Miles (km): Invoice number:		Comments/miscellaneous
Type of operation: Service ◻ ..... ◻ **Anticorrosion check:** OK ◻ Not OK* ◻ *See specific page	**Stamp**	

Date: Miles (km): Invoice number:		Comments/miscellaneous
Type of operation: Service ◻ ..... ◻ **Anticorrosion check:** OK ◻ Not OK* ◻ *See specific page	**Stamp**	

Date: Miles (km): Invoice number:		Comments/miscellaneous
Type of operation: Service ◻ ..... ◻ **Anticorrosion check:** OK ◻ Not OK* ◻ *See specific page	**Stamp**	

Downloaded from www.Manualslib.com manuals search engine

SERVICE SHEETS (5/6)

VIN: .....

Date: Miles (km):	Invoice number:	Comments/miscellaneous
Type of operation: Service ◻ ..... ◻ **Anticorrosion check:** OK ◻ Not OK* ◻ *See specific page	**Stamp**	

Date: Miles (km):	Invoice number:	Comments/miscellaneous
Type of operation: Service ◻ ..... ◻ **Anticorrosion check:** OK ◻ Not OK* ◻ *See specific page	**Stamp**	

Date: Miles (km):	Invoice number:	Comments/miscellaneous
Type of operation: Service ◻ ..... ◻ **Anticorrosion check:** OK ◻ Not OK* ◻ *See specific page	**Stamp**	

Downloaded from www.Manualslib.com manuals search engine

SERVICE SHEETS (6/6)

VIN: .....

Date: Miles (km):	Invoice number:	Comments/miscellaneous
Type of operation: Service ◻ ..... ◻ **Anticorrosion check:** OK ◻ Not OK* ◻ *See specific page	**Stamp**	

Date: Miles (km):	Invoice number:	Comments/miscellaneous
Type of operation: Service ◻ ..... ◻ **Anticorrosion check:** OK ◻ Not OK* ◻ *See specific page	**Stamp**	

Date: Miles (km):	Invoice number:	Comments/miscellaneous
Type of operation: Service ◻ ..... ◻ **Anticorrosion check:** OK ◻ Not OK* ◻ *See specific page	**Stamp**	

Downloaded from www.Manualslib.com manuals search engine

ANTICORROSION CHECK (1/6)

If the continuation of the warranty is subject to repair, it is indicated below.

VIN: .....

Corrosion repair operation to be carried out: Date of repair:	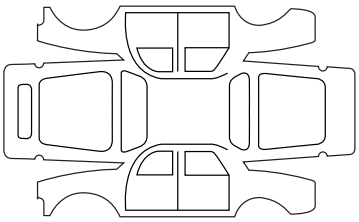	**Stamp**
Repair to be carried out: Date of repair:	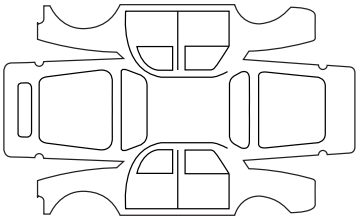	**Stamp**
Repair to be carried out: Date of repair:	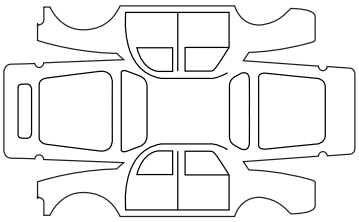	**Stamp**

Downloaded from www.Manualslib.com manuals search engine

ANTICORROSION CHECK (2/6)

If the continuation of the warranty is subject to repair, it is indicated below.

VIN: .....

Corrosion repair operation to be carried out: Date of repair:	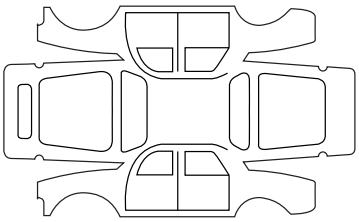	**Stamp**
Repair to be carried out: Date of repair:	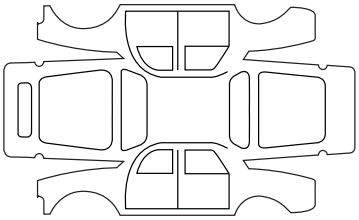	**Stamp**
Repair to be carried out: Date of repair:	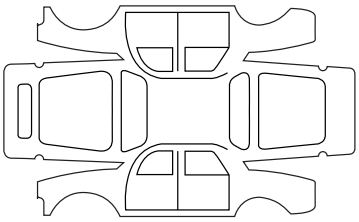	**Stamp**

Downloaded from www.Manualslib.com manuals search engine

ANTICORROSION CHECK (3/6)

If the continuation of the warranty is subject to repair, it is indicated below.

VIN: .....

Corrosion repair operation to be carried out: Date of repair:	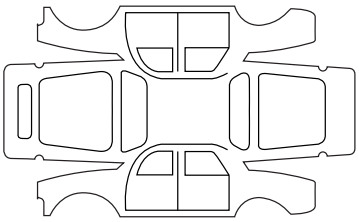	**Stamp**
Repair to be carried out: Date of repair:	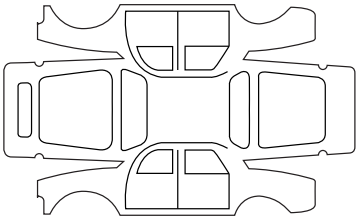	**Stamp**
Repair to be carried out: Date of repair:	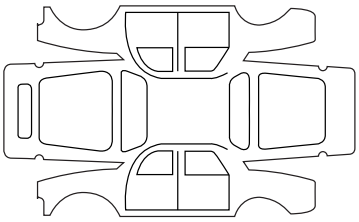	**Stamp**

Downloaded from www.Manualslib.com manuals search engine

ANTICORROSION CHECK (4/6)

If the continuation of the warranty is subject to repair, it is indicated below.

VIN: .....

Corrosion repair operation to be carried out: Date of repair:	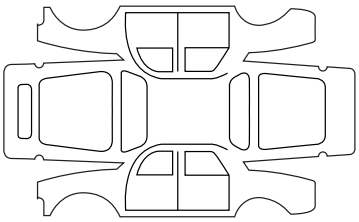	**Stamp**
Repair to be carried out: Date of repair:	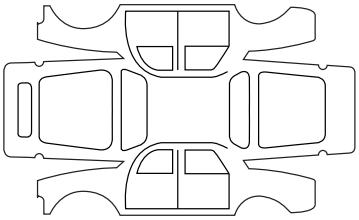	**Stamp**
Repair to be carried out: Date of repair:	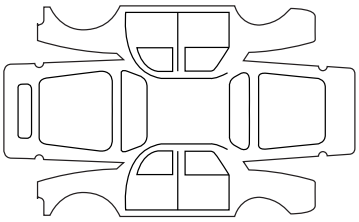	**Stamp**

Downloaded from www.Manualslib.com manuals search engine

ANTICORROSION CHECK (5/6)

If the continuation of the warranty is subject to repair, it is indicated below.

VIN: .....

Corrosion repair operation to be carried out: Date of repair:	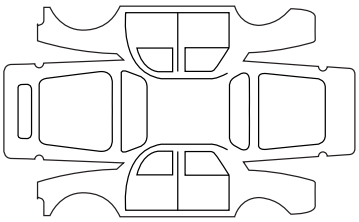	**Stamp**
Repair to be carried out: Date of repair:	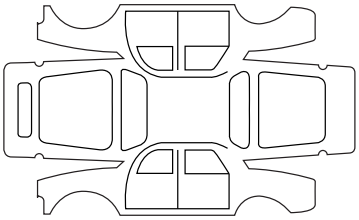	**Stamp**
Repair to be carried out: Date of repair:	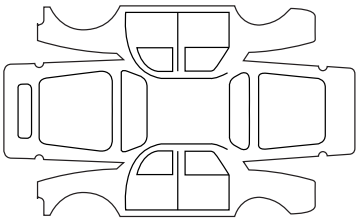	**Stamp**

Downloaded from www.Manualslib.com manuals search engine

ANTICORROSION CHECK (6/6)

If the continuation of the warranty is subject to repair, it is indicated below.

VIN: .....

Corrosion repair operation to be carried out: Date of repair:	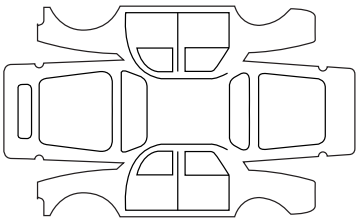	**Stamp**
Repair to be carried out: Date of repair:	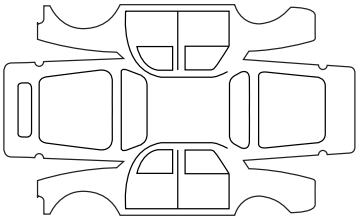	**Stamp**
Repair to be carried out: Date of repair:	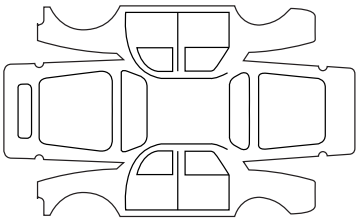	**Stamp**

Downloaded from www.Manualslib.com manuals search engine

Downloaded from www.Manualslib.com manuals search engine

ALPHABETICAL INDEX (1/4)

A

ABS ....2.16 → 2.20
accessories.... 5.41
accessories socket 3.18
AdBlue ....1.103 → 1.108
AdBlue additive....1.103 → 1.108
additional systems to the seat belts.... 1.29
additive (tank)....1.103 → 1.108
additive tank ....1.103 → 1.108
adjusting the seats.... 1.22
adjusting your driving position 1.22
advice on antipollution 2.12
air bag....1.26 → 1.29
    activating the front passenger air bags....1.68 → 1.70
    deactivating the front passenger air bags....1.68 → 1.70
air conditioning ....3.2 → 3.13
air vents .... 3.2 – 3.3
anti-corrosion check ....6.16 → 6.21
anti-corrosion protection 4.14
anti-lock braking system: ABS ....2.16 → 2.20
antipollution
    advice 2.12
ashtrays 3.18
audible and visual signals.... 1.100

B

battery.... 4.13
    troubleshooting .... 5.33 – 5.34
bonnet.... 4.2
brake fluid 4.8
bulbs
    changing ....5.21 – 5.22, 5.25 → 5.27

C

capacity of mechanical components....4.8 → 4.10
central door locking .... 1.2 → 1.11, 1.14 → 1.17
changing a bulb ....5.21 – 5.22, 5.25 → 5.27
changing a wheel.... 5.2 → 5.4, 5.11 → 5.15, 5.17
changing gear.... 2.14
child restraint/seat1.28, 1.31 – 1.32, 1.36 → 1.55, 1.68 → 1.70
child safety.... 1.2, 1.31 – 1.32, 1.36 → 1.55, 1.68 → 1.70
child seats....1.31 – 1.32, 1.36 → 1.55
children .... 1.2, 1.31 – 1.32
cigar lighter 3.18
cleaning:
    inside the vehicle .... 4.16 – 4.17
clock 1.92
control instruments ....1.76 → 1.83
coolant 1.81
courtesy light 3.16, 5.27
cruise control ....2.29 → 2.32
cruise control-speed limiter....2.26 → 2.32

D

demisting
    windscreen....3.4, 3.7 → 3.12
dimensions .... 6.6 – 6.7
dipstick.... 4.4 – 4.5
display .... 1.82 – 1.83
doors.... 1.12 – 1.13, 1.16 – 1.17
driver's position ....1.72 → 1.75
driving ....2.2, 2.10, 2.16 → 2.23, 2.33
driving recommendations ....2.8 → 2.11

E

ECO driving ....2.8 → 2.11
ECO mode.... 2.9
electric beam height adjustment.... 1.99
electric windows .... 3.14 – 3.15
electronic stability control: ESC ....2.16 → 2.20
emergency brake assist....2.16 → 2.20
emergency braking ....2.16 → 2.20

Downloaded from www.Manualslib.com manuals search engine

ALPHABETICAL INDEX (2/4)

emergency spare wheel ..... 5.2 – 5.3
engine
technical specifications 6.5
engine coolant 4.9
engine oil .....4.4 → 4.7
engine oil level.....1.81, 4.4 → 4.7
engine specifications 6.5
environment..... 2.13
ESC: electronic stability control .....2.16 → 2.20
external lights and signals .....1.95 → 1.99
external temperature 1.92

F
filter..... 4.10
fitting a radio 5.40
foot panel..... 5.37
front passenger air bag deactivation .....1.68 → 1.70
front seat adjustment..... 1.19
front seats..... 1.19
fuel
advice on fuel economy .....2.8 → 2.11
consumption .....2.8 → 2.11
filling..... 1.101 – 1.102
grade..... 1.101
fuel consumption .....2.8 → 2.11
fuel filler cap ..... 1.101 – 1.102
fuel grade..... 1.102
fuel level 1.81
fuel repriming..... 1.101 – 1.102
fuel tank ..... 1.101 – 1.102
fuel tank capacity..... 1.101
fuses .....5.28 → 5.32

G
gear lever.....2.14, 2.41 → 2.46
grab handle..... 3.17
grip control..... 2.19
ground clearance..... 6.6 – 6.7

H
handbrake..... 2.15
hazard warning lights signal 1.100
headrest..... 1.18
heated seats 1.19
heating and air conditioning system .....3.2 – 3.3, 3.7 → 3.13
heating system .....3.2 → 3.6, 3.13
Hill Start Assist.....2.16 → 2.20
hubcap tool ..... 5.4, 5.11 – 5.12

I
idle speed 2.39
ignition switch 2.2
indicators 1.100
indicators:
direction indicators 1.100
instrument panel .....1.76 → 1.81
instrument panel .....1.76 → 1.83
interior lighting:
changing bulbs..... 5.27
interior trim
maintenance ..... 4.16 – 4.17

J
jack 5.4

K
keys .....1.2 → 1.6

L
lane departure warning..... 2.24 – 2.25
levels:
brake fluid 4.8

Downloaded from www.Manualslib.com manuals search engine

ALPHABETICAL INDEX (3/4)

coolant 4.9
power-assisted steering pump 4.10
lifting the vehicle
changing a wheel ..... 5.4, 5.13 → 5.15, 5.17
lighting:
interior 3.16
lights:
adjustment of headlight beam height 1.99
brake lights ..... 5.25 – 5.26
daytime running lights ..... 5.21 – 5.22
dipped beam headlights ..... 1.95, 5.21 – 5.22, 5.25
direction indicators ..... 5.21 – 5.22
fog lights 1.98, 5.25
hazard warning 5.25
main beam headlights ..... 1.96, 5.21 – 5.22
reversing lights 5.25
side lights ..... 1.95, 5.21 – 5.22
lights-on warning buzzer 1.96
locking the doors ..... 1.2 → 1.8, 1.11, 1.14 – 1.15

M
maintenance 2.12
maintenance:
bodywork ..... 4.14 – 4.15
interior trim ..... 4.16 – 4.17
mechanical ..... 6.10 → 6.15
mileage before service ..... 6.10 → 6.15
manufacturer's plates 6.2
methods of restraint in addition to the front seat belts ..... 1.26 → 1.28

N
navigation system 1.92, 3.27

O
oil change ..... 4.6 – 4.7
operating faults ..... 5.42 → 5.45

P
paintwork
maintenance ..... 4.14 – 4.15
reference 6.2
parking distance control ..... 2.34 – 2.35
power-assisted steering 1.91
puncture ..... 5.2 → 5.10, 5.13 → 5.15, 5.17

R
radio
fitting a radio 5.40
rear bench seat ..... 3.25 – 3.26
rear view camera ..... 2.36 – 2.37
rear view mirrors 1.71
remote control door locking
batteries 5.35
remote control door locking unit ..... 1.2 → 1.6
RENAULT ANTI-INTRUDER DEVICE (RAID) 1.11
replacement parts 6.9
reverse gear
selecting 2.14
running in 2.2

S
screen wash/wipe ..... 1.93 – 1.94
seat belt pretensioners
front seat belt ..... 1.26 → 1.28
seat belts ..... 1.22 → 1.24, 1.29
see-me-home lighting 1.96
sequential gearbox ..... 2.41 → 2.46
service sheets ..... 6.10 → 6.15
signals and lights ..... 1.95 → 1.99
speakers
location 5.40

Downloaded from www.Manualslib.com manuals search engine

ALPHABETICAL INDEX (4/4)

special features of diesel versions 2.7
speed limiter ..... 2.26 → 2.28
starting the engine 2.3
steering wheel
adjustment 1.91
Stop & Start ..... 2.4 → 2.6
Stop & Start function ..... 2.4 → 2.6
stopping the engine 2.3
storage compartment ..... 3.19 → 3.24
storage compartments ..... 3.19 → 3.24
sun visor 3.17

T

tailgate 3.28
tank
AdBlue ..... 1.103 → 1.108
tanks and reservoirs:
windscreen washer 4.10
technical specifications ..... 6.2 – 6.3, 6.6 → 6.9
temperature regulation 3.13
tool kit 5.4
towing 3.28
driving 2.18
breakdown ..... 5.38 – 5.39
towing a caravan 6.8
towing hitch 5.4
towing rings ..... 3.28 – 3.29
towing weights 6.8
traction control ..... 2.16 → 2.20
transporting children ..... 1.31 – 1.32, 1.36 → 1.55, 1.68 → 1.70
transporting objects
in the luggage compartment ..... 3.28 – 3.29
trims ..... 5.11 – 5.12
trip computer and warning system ..... 1.82 – 1.83
turning circle ..... 6.6 – 6.7
tyre inflation kit ..... 5.5 → 5.10
tyre pressure ..... 2.21 → 2.23, 4.11 – 4.12
tyre pressure loss warning ..... 2.21 → 2.23
tyre pressures ..... 4.11 – 4.12
tyres ..... 2.21 → 2.23, 4.11 – 4.12, 5.18 → 5.20

U

unlocking the doors ..... 1.7 → 1.10
use in winter 5.20

V

vehicle identification ..... 6.2 – 6.3
vehicle identification plates ..... 6.2 – 6.3
ventilation 3.13
air conditioning ..... 3.2 – 3.3

W

warning buzzer ..... 1.12 – 1.13
warning lights ..... 1.76 → 1.81
washing ..... 4.14 – 4.15
weights 6.8
wheelbrace 5.4
wheels (safety) ..... 5.18 → 5.20
windows ..... 3.14 – 3.15
wiper blades 5.37

Downloaded from www.Manualslib.com manuals search engine

Downloaded from www.Manualslib.com manuals search engine

7.6

Downloaded from www.Manualslib.com manuals search engine

Downloaded from www.Manualslib.com manuals search engine

RENAULT S.A.S. SOCIÉTÉ PAR ACTIONS SIMPLIFIÉE AU CAPITAL DE 533 941 113 € / 13-15, QUAI LE GALLO
92100 BOULOGNE-BILLANCOURT R.C.S. NANTERRE 780 129 987 — SIRET 780 129 987 03591 / TÉL. : 0810 40 50 60
NU 1033-5 – 99 91 033 98R – 02/2016 – Edition anglaise

Downloaded from www.Manualslib.com manuals search engine